Q-Blast

Auto-Clean pH System

Home Office
Analytical Technology, Inc.
6 Iron Bridge Drive
Collegeville, PA19426

Ph: (800) 959-0299
(610) 917-0991
Fax: (610) 917-0992
Email: sales@analyticaltechnology.com

European Office
ATI (UK) Limited
Unit 1 & 2 Gatehead Business Park
Delph New Road, Delph
Saddleworth OL3 5DE
Ph: 0800-018-4020
+ 44 (0) 1457-873-318
Fax: + 44 (0) 1457-874-468
Email:sales@atiuk.com

PRODUCT WARRANTY

Analytical Technology, Inc. (Manufacturer) warrants to the Customer that if any part(s) of the Manufacturer's equipment proves to be defective in materials or workmanship within the earlier of 18 months of the date of shipment or 12 months of the date of start-up, such defective parts will be repaired or replaced free of charge. Inspection and repairs to products thought to be defective within the warranty period will be completed at the Manufacturer's facilities in Collegeville, PA. Products on which warranty repairs are required shall be shipped freight prepaid to the Manufacturer. The product(s) will be returned freight prepaid and allowed if it is determined by the manufacturer that the part(s) failed due to defective materials or workmanship.

This warranty does not cover consumable items, batteries, or wear items subject to periodic replacement including lamps and fuses.

Gas sensors carry a 12 months from date of shipment warranty and are subject to inspection for evidence of misuse, abuse, alteration, improper storage, or extended exposure to excessive gas concentrations. Should inspection indicate that sensors have failed due to any of the above, the warranty shall not apply.

The Manufacturer assumes no liability for consequential damages of any kind, and the buyer by acceptance of this equipment will assume all liability for the consequences of its use or misuse by the Customer, his employees, or others. A defect within the meaning of this warranty is any part of any piece of a Manufacturer's product which shall, when such part is capable of being renewed, repaired, or replaced, operate to condemn such piece of equipment.

This warranty is in lieu of all other warranties (including without limiting the generality of the foregoing warranties of merchantability and fitness for a particular purpose), guarantees, obligations or liabilities expressed or implied by the Manufacturer or its representatives and by statute or rule of law.

This warranty is void if the Manufacturer's product(s) has been subject to misuse or abuse, or has not been operated or stored in accordance with instructions, or if the serial number has been removed.

Analytical Technology, Inc. makes no other warranty expressed or implied except as stated above.

Table of Contents

Part 1 - Introduction 5
1.1 General 5
1.2 Standard System 5
1.3 Features 6
1.4 Q46P Auto-Clean System Specifications 9
1.5 Q46P Performance Specifications (includes sensor) 10
1.6 Q-Blast Assembly 10
Part 2 - Mechanical Installation 11
2.1 General 11
2.2 Wall Mount Dimensions 12
2.3 Railing Mount 14
2.4 Sensor Installation 15
Part 3 - Electrical Installation 17
3.1 General 17
3.2 Connections 17
3.3 Relay Wiring 19
3.4 Built-In Heater 19
3.5 Remote Cleaner Unit Wiring 21
Part 4 - pH Sensor 22
4.1 General 22
Part 5 - Operation 23
5.1 User Interface 23
5.11 Keys 24
5.12 Display 24
5.2 Software 26
5.21 Software Navigation 26
5.22 Measure Menu [MEASURE] 29
5.23 Calibration Menu [CAL] 30
5.24 Configuration Menu [CONFIG] 31
5.25 Control Menu [CONTROL] 36
5.26 Diagnostics Menu [DIAG] 42
Part 6 - Calibration 47
6.1 Overview and Methods 47
6.2 Sensor Slope 47
6.3 Sensor Offset 48
6.4 2-Point Calibration Explained 48
6.5 1-Point Calibration Explained 48
6.6 Performing a 2-Point Calibration 49
6.7 Performing a 1-Point Calibration 51
6.8 Temperature Calibration 52
Part 7 - Sensor Auto-Clean System 54
7.1 General 54
7.2 Cleaner Sequence 54
Part 8 - PID Controller Details 56
8.1 PID Description 56
8.2 PID Algorithm 56
8.3 Classical PID Tuning 58
8.4 Manual PID Override Control 59
8.5 Common PID Pitfalls 59
Part 9 - System Maintenance 61
9.1 General 61
9.2 Analyzer Maintenance 61
9.3 Cleaning the Sensor 61
9.4 Replacing Sensor Saltbridge 62
Part 10 - Troubleshooting 64
10.1 General 64
10.2 External Problem Sources 64
10.3 Instrument Checks 66
10.5 Sensor Tests 69
Spare Parts 71

Table of Figures

Figure 1 – pH System w/Optional Mounting Plate 8
Figure 2 - Wall Mount Analyzer Dimensions 12
Figure 3 - Cleaner Enclosure Dimensions 13
Figure 4 - Handrail Mounting Assembly 14
Figure 5 -Sensor Mounting Assembly 15
Figure 6 - Sensor Mounting Detail 16
Figure 7 - Electrical Connections 18
Figure 8 - Analog Output & Relay Terminals 20
Figure 9 - Submersible PH Sensor Assy 22
Figure 10 - User Interface 23
Figure 11 - Software Map 28
Figure 12 - Automatic pH Buffer Tables 33
Figure 13 - Control Relay, Hysteresis & Phase Options 39
Figure 14 - Alarm Relay Example 40
Figure 15 - ISA PID Equation 57
Figure 16 - Saltbridge / Reference Buffer Instructions 63
Figure 17 - Q46P Display Messages 68

Part 1 - Introduction

1.1 General

The Model Q46P is a versatile on-line monitoring system designed for the continuous measurement for monitoring and control of pH. The full scale operating range of the system 0.00 to 14.00 pH, and the sensing system will operate on water streams with temperatures ranging from 0 to 50°C.

Q46P Analyzers are available in two electronic versions, an AC powered analyzer with integral alarm relays and dual 4-20 mA output capability, and a 12-24 VDC unit with dual output and relays. An optional digital output is available for Profibus-DP, Modbus-RTU, or Ethernet-IP.

1.2 Standard System

The Model Q46P Autoclean system includes three main components, a NEMA 4X electronics unit, the “Q-Blast” NEMA 4X Air-Blast cleaning assembly, and a submersible pH Probe with cleaner nozzle. Probes are design for direct immersion in an aeration tank or flowing stream. pH Probes come with a standard 30 ft. cable and connect directly to the Q46P Analyzer. A separate tubing connection located on the Q-Blast assembly is provided for connection of a 30 foot length of plastic tubing (supplied with the unit). A typical system is shown in Figure 1

Note that Figure 1 shows the pH Analyzer and Q-Blast cleaner mounted on ATI’s optional panel assembly with power distribution box. The panel and power distribution box are not part of standard systems, and must be ordered separately using part number (00-1637).

The pH Probe assembly is mounted to a 1" pipe using a special mounting adapter supplied as part of the 00-0624 mounting assembly. The 1" pipe is attached to the tank handrail with a bracket assembly that holds the sensor at a slight angle in the tank.

Once installed and placed into operation, the Q46P Auto-Clean pH system will provide months of reliable pH measurement in almost any application. Probes should be checked for build-up after the first 3 months to verify that the cleaner is keeping the sensor clean. However, sensor maintenance intervals of 6 months or more are likely in most aeration tanks.

The sensor automatic cleaning frequency is user programmable, and units are shipped with a default cleaning frequency of once every 24 hours. This frequency has proven sufficient for most aeration applications, but can be increased if needed for a specific application. A cleaning frequency of more than every 2 hours is not recommended. Contact your ATI representative for more information if an 8-hour cleaning cycle does not keep the sensor clean

1.3 Features

- Standard Q46P electronic analyzers are designed to be fully isolated instruments for operation from either 90-260 VAC or 12-24 VDC power supplies.

- High accuracy, high sensitivity system, measures from 0.00 pH to 14.00 pH.

- Two 4-20 mA analog outputs are standard. One output may be configured to track pH or as a PID control output, while the other output is programmable to track either pH or Temperature.

- Output Hold, Output Simulate, Output Alarm, and Output Delay Functions. All forced changes in output condition include bumpless transfer to provide gradual return to on-line signal levels and to avoid system control shocks on both analog outputs.

- Units provide three SPDT relay outputs and two isolated analog outputs. Software settings for relay control include setpoint, deadband, phase, delay, and failsafe. An additional bank of three low-power relays (0-30 VDC) is included for Q-Blast cleaner control.

- Large, high contrast, custom LCD display with LED back light provides excellent readability in any light conditions. The secondary line of display utilizes 5x7 dot matrix characters for clear message display two of four measured parameters may be on the display simultaneously.

- Diagnostic messages provide a clear description of any problem with no confusing error codes to look up. Messages are also included for diagnosing calibration problems.

- Selection of either 1 or 2 point calibration, with auto buffer recognition. All calibration methods include stability monitors that check temperature and main parameter stability before accepting data.

- High Accuracy Selectable Pt1000 or Pt100 Temperature Inputs. Systems can also be hard configured for three wire elements. Temperature element can be user calibrated.

- Security lock feature to prevent unauthorized tampering with transmitter settings. All settings can be viewed while locked, but they cannot be changed.

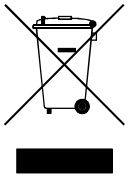

Equipment bearing this marking may not be discarded by traditional methods in the European community after August 12 2005 per EU Directive 2002/96/EC. End users must return old equipment to the manufacturer for proper disposal.

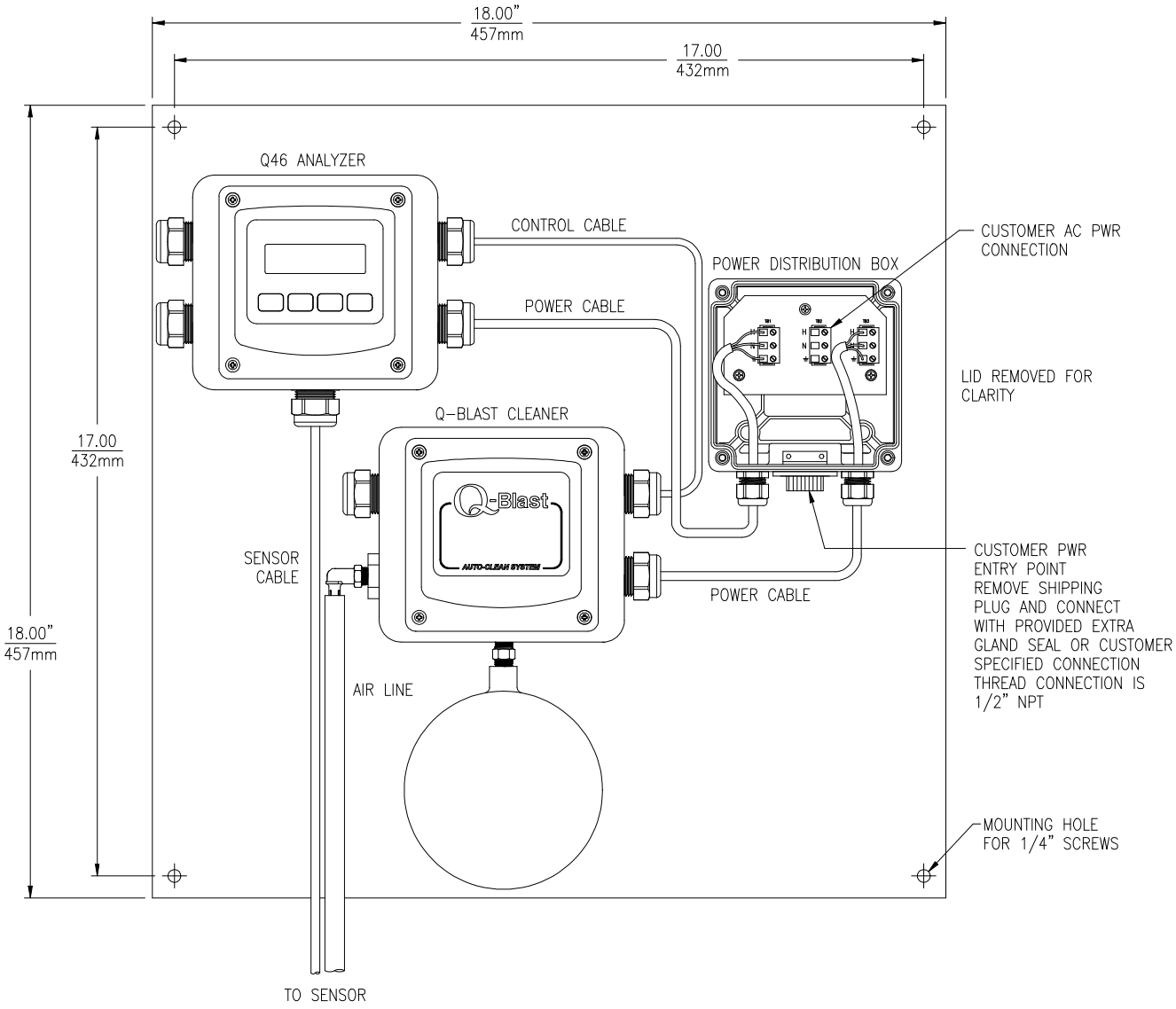

Figure 1 – pH System w/Optional Mounting Plate

1.4 Q46P Auto-Clean System Specifications

Main Parameter Ranges	0.00 to 14.00 pH
Power	90-260 VAC, 50/60 Hz., 10 VA Maximum or 12-24 VDC, 500 mA max.
Display	0.75” (19.1 mm) high 4-digit main display with sign 12-digit secondary display, 0.3" (7.6 mm) 5x7 dot matrix. Integral LED back-light for visibility in the dark.
Enclosure	NEMA 4X, IP-66 polycarbonate, stainless steel hardware,
Analog Outputs	Two 4-20 mA outputs. Output one programmable for pH or PID. Output 2 programmable for pH. or Temperature. Max load 450 Ohms for output 1 and 1000 ohms for output 2. Outputs ground isolated and isolated from each other.
Output Isolation	600 V galvanic isolation
Optional Digital Output:	Profibus-DP, Modbus-RTU or Ethernet-IP available.
Relays, Electromechanical:	Three SPDT, 6 amp @ 250 VAC, 5 amp @ 24 VDC contacts. Software selection for setpoint, phase, delay, deadband, hi-lo alarm, and failsafe. A-B indicators on main LCD, and C indicator on lower display. Three additional low-power (0-30 VDC) relays are used to control the Q-Blast cleaner functions.
Weight	Electronics Assembly: 2.4lbs. (1.1 kg) Sensor Assembly: 3.5 lbs. (1.58 kg.)
Ambient Temperature	Analyzer Service, -20 to 60 °C (-4 to 140 ºF) Sensor Service, -5 to 55°C (23 to 131 °F) Storage, -30 to 70 °C (-22 to 158 ºF)
Ambient Humidity	0 to 95%, non-condensing
Altitude	Up to 2000 m (6562 ft.)
Location	Designed for hazardous and non-hazardous areas
EMI/RFI Influence	Designed to EN 61326-1
Temperature Input	Selectable Pt1000 or Pt100 RTD with automatic compensation

Sensor	Submersible Sensor w/Cleaner Nozzle
Sensor Materials	PVC, titanium, and PEEK, and glass electrode
Sensor Cable	Submersible: 30 ft. (9.1 m)
Max. Sensor Cable Length:	500 feet (153 m), with junction box

1.5 Q46P Performance Specifications (includes sensor)

Accuracy	0.1% of span or better (± 0.01 pH)
Repeatability	0.1% of span or better (± 0.01 pH)
Sensitivity	0.05% of span (± 0.01 pH)
Electronic Stability	0.05% of span per 24 hours, non-cumulative
Temperature Drift	Span or zero, 0.02% of span/ºC

1.6 Q-Blast Assembly

Power	90- 260 VAC, 50/60 Hz., 10 VA Maximum 12-24 VDC, 500 mA max.
Enclosure	NEMA 4X, IP-66 polycarbonate, stainless steel hardware,
Compressor	12 VDC Diaphragm Type, 28 PSI (1.9 Bar) Maximum
Heater	Internal thermostatically controlled.
Ambient Temperature	Operating, -40 to 60 °C (-40 to 140 ºF) Storage, -40 to 70 °C (-40 to 158 ºF)
Max. Air Tubing Length:	60 feet (18.2 m)
Air Accumulator	Powder coated stainless steel
Weight	3.7 lbs. (1.7 kg)

Part 2 - Mechanical Installation

2.1 General

The Q46P Auto-Clean pH System consists of two assemblies housed in NEMA 4X (IP-66) enclosures. The analyzer electronics and the Q-Blast cleaner assembly should both be mounted near the sensor location, with a maximum of 60 feet between the monitor/cleaner and the sensor. The standard system is supplied with a 30 ft. sensor cable and 30 feet of air line tubing. Best performance is obtained by keeping sensor cable and air tubing length as short as practical.

Installation of a complete Q46P Auto-Clean System requires mounting both the analyzer electronics and the cleaner assembly, mounting the sensor assembly, and running a 3-conductor interconnect wire between the analyzer and cleaner assemblies. Both the analyzer and the Q-Blast assembly require power connection. If the system is purchased with optional mounting plate and power distribution box, interconnect wiring will already be complete and only one power connection is required at the junction box.

The analyzer enclosure and the cleaner enclosure may be mounted to any flat surface, like a wall or plate. A bracket assembly is available (#00-0930) for mounting a flat PVC, aluminum, or stainless steel plate to hold the two enclosures to typical aeration handrail systems. This bracket locates the monitor at a convenient height for viewing the display and using the controls.

2.2 Wall Mount Dimensions

Figure 2 shows the dimensions of the analyzer dimensions. Note that the enclosure mounting brackets are not installed at the factory. They are supplied separately and must be attached using the screws provided. This is done to protect the brackets against shipping damage.

Figure 3 shows the dimensions of the Q-Blast assembly. This enclosure should be mounted beside the analyzer enclosure as shown in Figure 1. If the optional mounting plate and power junction box were purchased, the analyzer and cleaner will be supplied mounted to the plate.

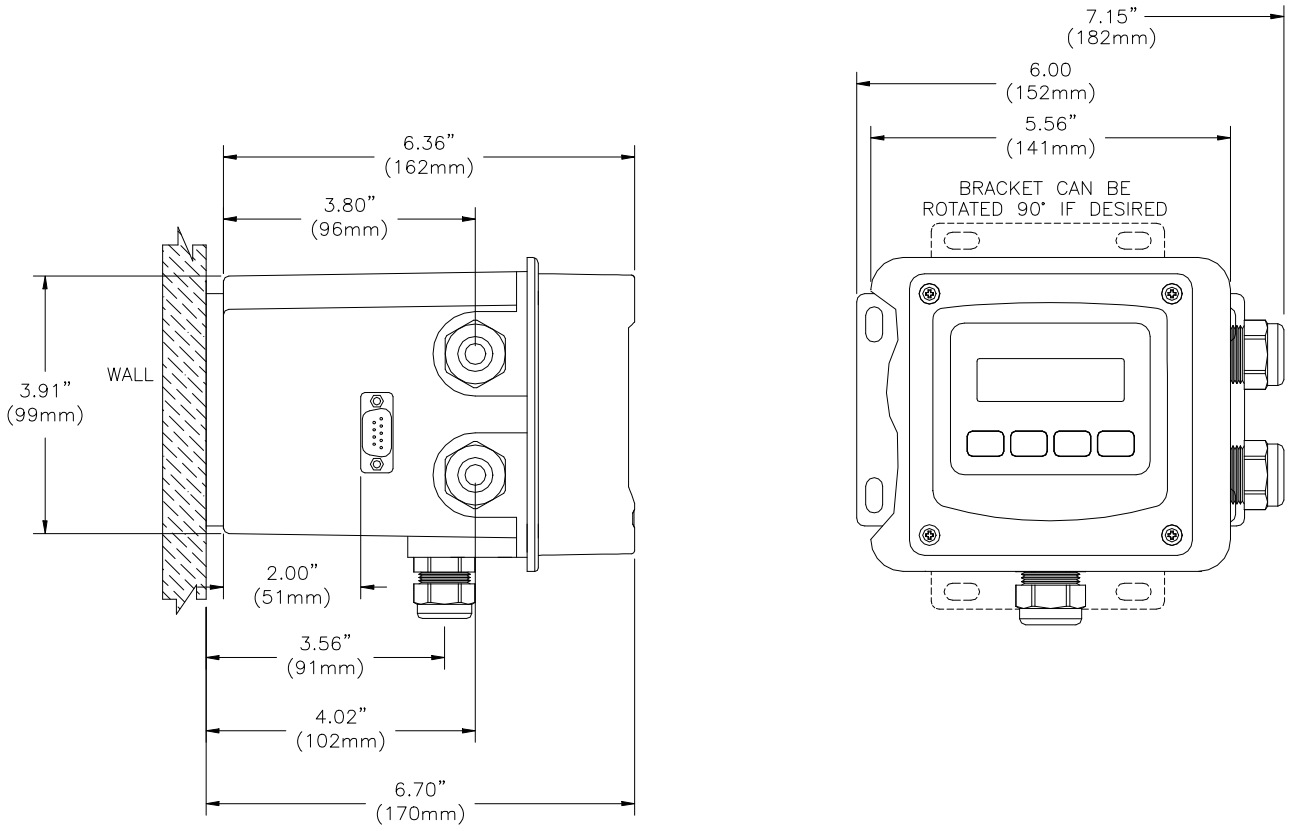

Figure 2 - Wall Mount Analyzer Dimensions

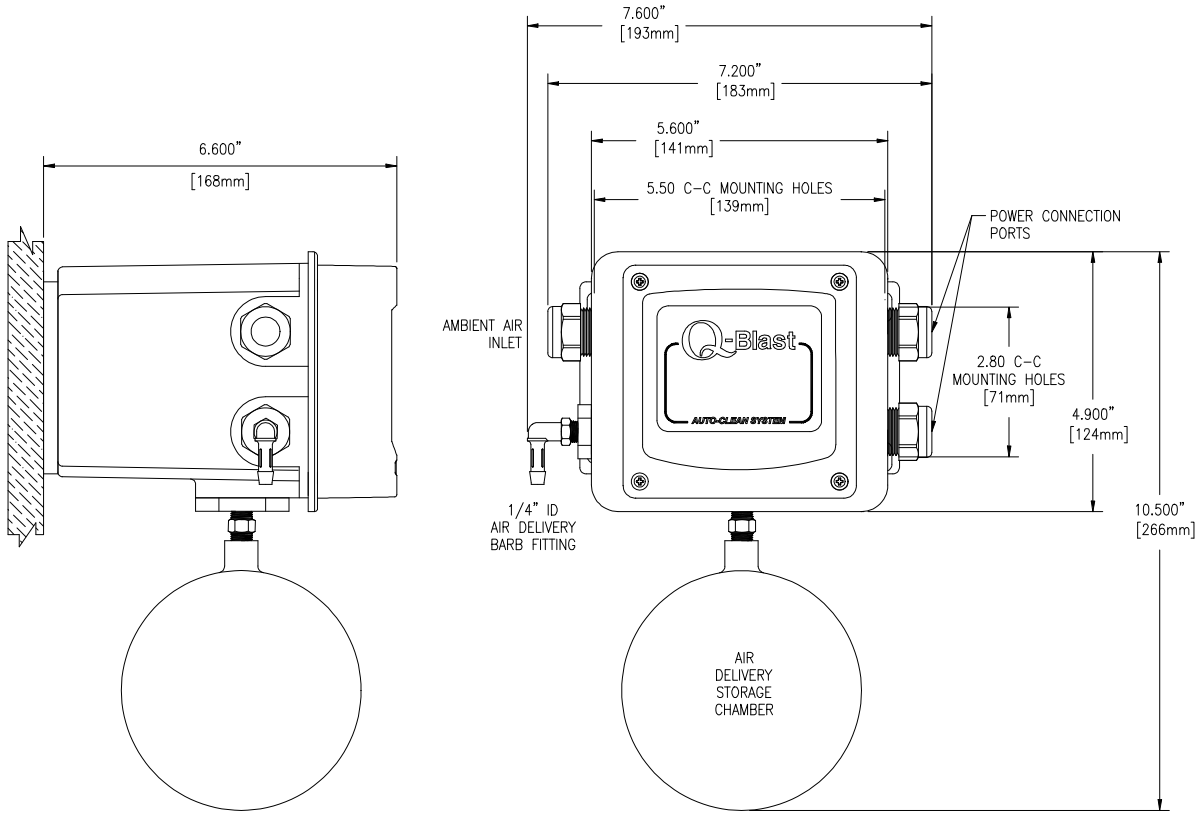

Figure 3 - Cleaner Enclosure Dimensions

2.3 Railing Mount

Figure 4 - Handrail Mounting Assembly shows the optional mounting assembly (on system mounting plate) used to mount the analyzer and cleaner assembly to a typical safety handrail that surrounds many aeration tanks. This bracket assembly consists of vertical channels attached to the handrail with u-bolts. The monitor screws to the channels with the 10-32 screws supplied as part of the kit. U-bolts for 2" diameter handrail pipe are also supplied.

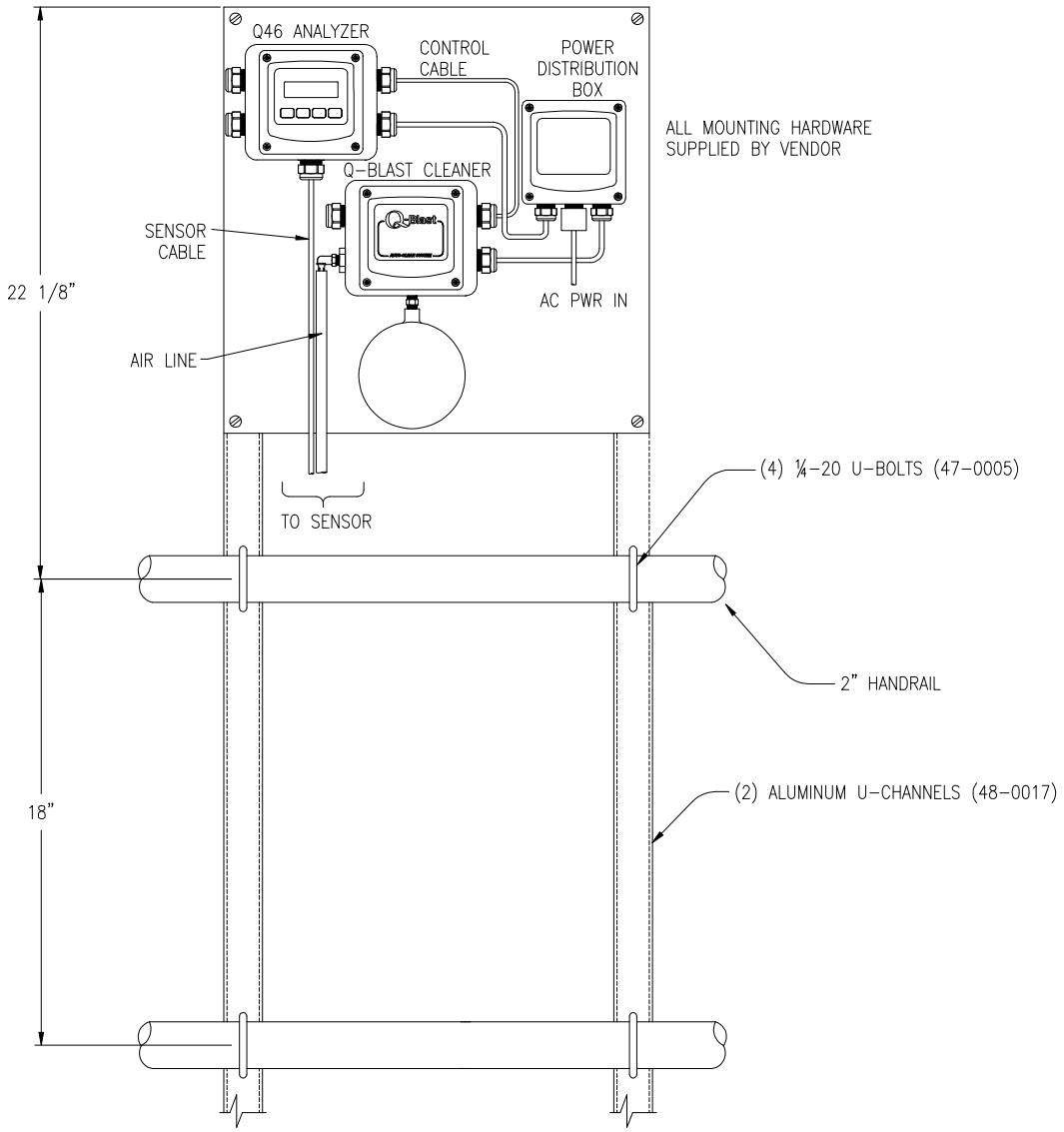

Figure 4 - Handrail Mounting Assembly

2.4 Sensor Installation

Most applications for pH monitoring are done using a submersible sensor. This method can be used where flow is reasonably constant, and hydraulic head does not vary more than about 10 feet.

Submersible sensors are mounted to a 1" pipe using a standard 1" PVC thread by thread pipe coupling. The mounting pipe can be secured to standard 1½" or 2" pipe rail using a mounting bracket kit available from ATI (part number 00-0628) as shown in Figure 5 & Figure 6.

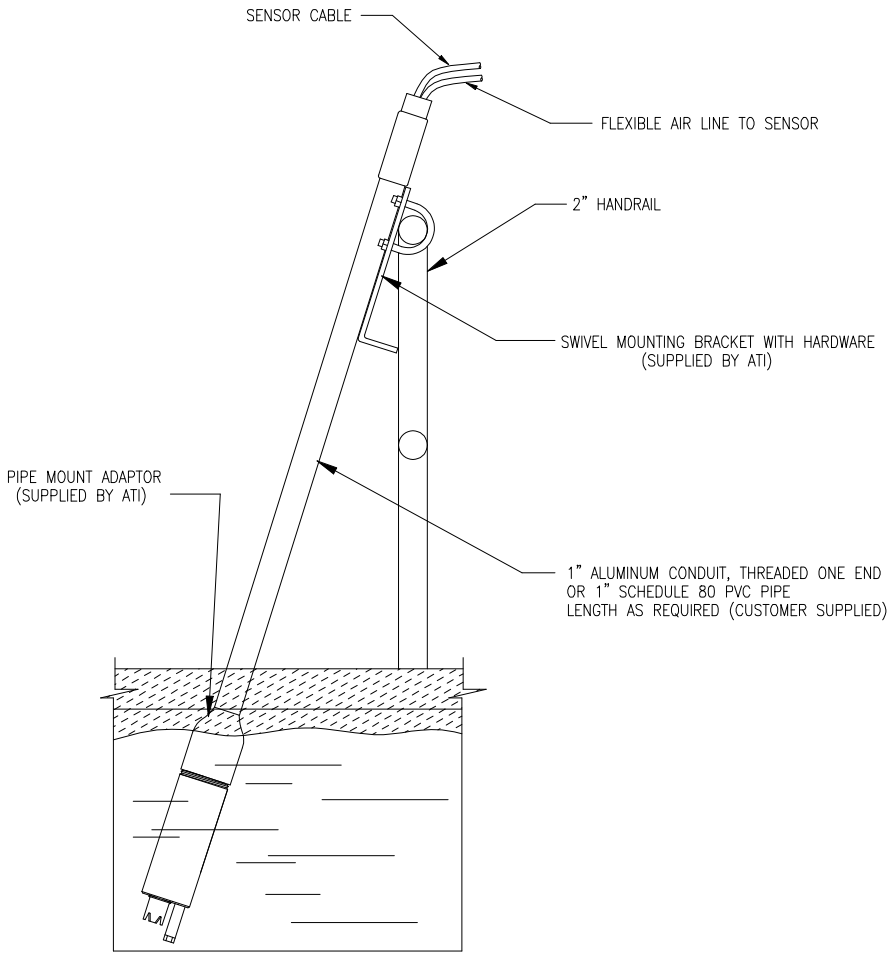

Figure 5 -Sensor Mounting Assembly

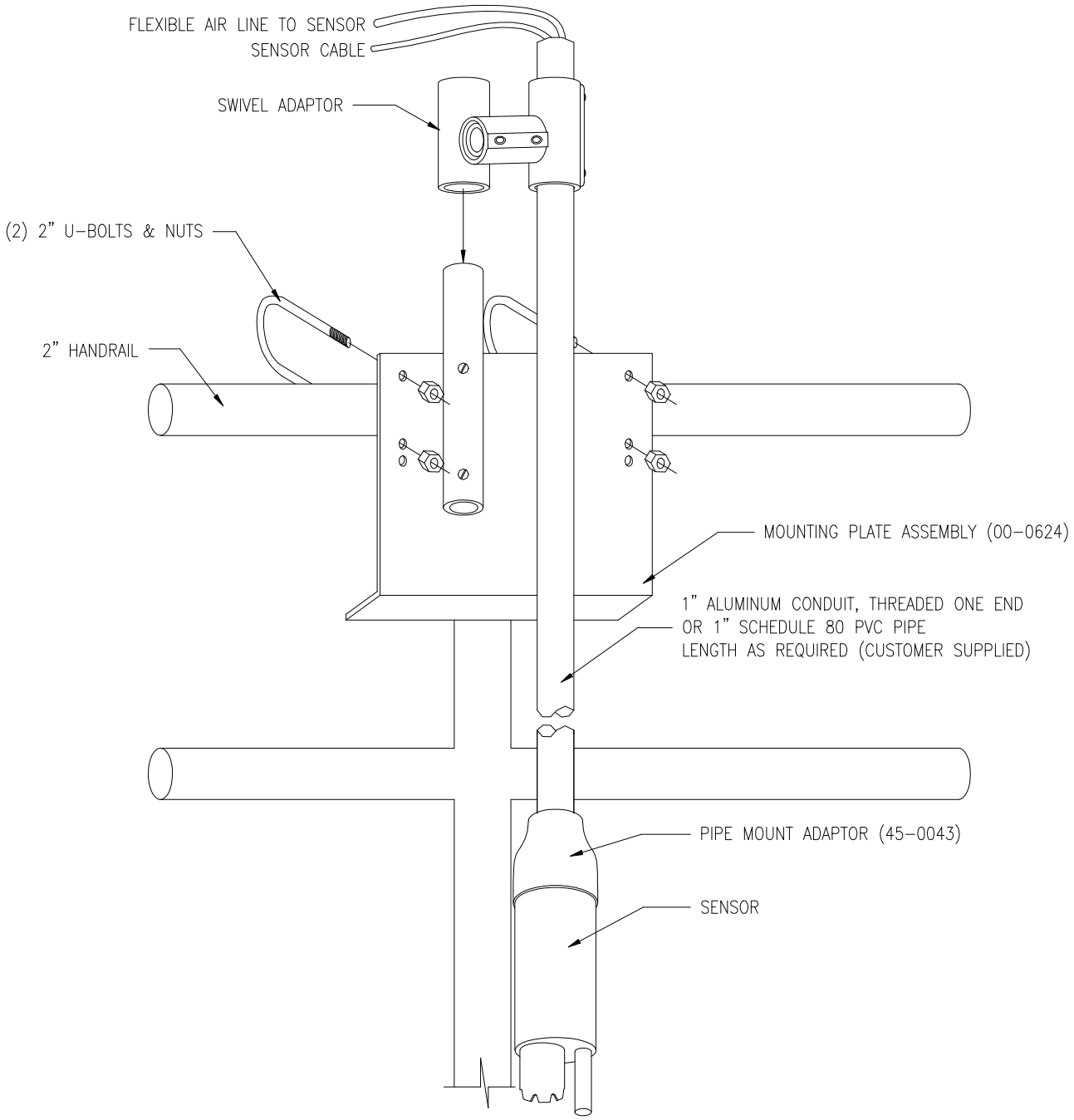

Figure 6 - Sensor Mounting Detail

Part 3 - Electrical Installation

3.1 General

Q46P Auto-Clean pH analyzers and Q-Blast cleaners are powered from 90-260 VAC, 50/60 Hz. or 12-24 VDC. Systems can draw up to 0.5 amps when the internal air compressor activates as part of the sensor cleaning system. Normal current draw is less than 0.2 amps when the cleaner is off.

Important Notes:

1. Use wiring practices that conform to all national, state and local electrical codes. For proper safety as well as stable measuring performance, it is important that the earth ground connection be made to a solid ground point from **TB1**.
2. Do NOT run sensor cables or instrument 4-20 mA output wiring in the same conduit that contains AC power wiring. AC power wiring should be run in a dedicated conduit to prevent electrical noise from coupling with the instrumentation signals.

3.2 Connections

Power connections are made at terminals inside both the monitor and cleaner enclosure. To access the terminal compartment, loosen the 4 screws holding the cover in place and set the cover aside. The screws are captive and should not come completely out of the plastic cover.

All sensor connections are made inside the Q46P analyzer. Prior to making any sensor wiring connections, the sensor wire and the cleaner air tube must be run up inside the mounting pipe as shown in the previous section, Figure 5 & Figure 6.

AC or DC power should be brought into the enclosures through the bottom gland seal on the right side of the enclosure. This entry is directly above the power terminal blocks. Terminal blocks are pluggable, and can be removed for easy wire connection.

A 3-conductor cable must be connected between the analyzer and the Q-Blast cleaner as shown in Figure 7.

Analog 4-20 mA output connections and relay connections are made to terminals in the Q46P as shown in Figure 8.

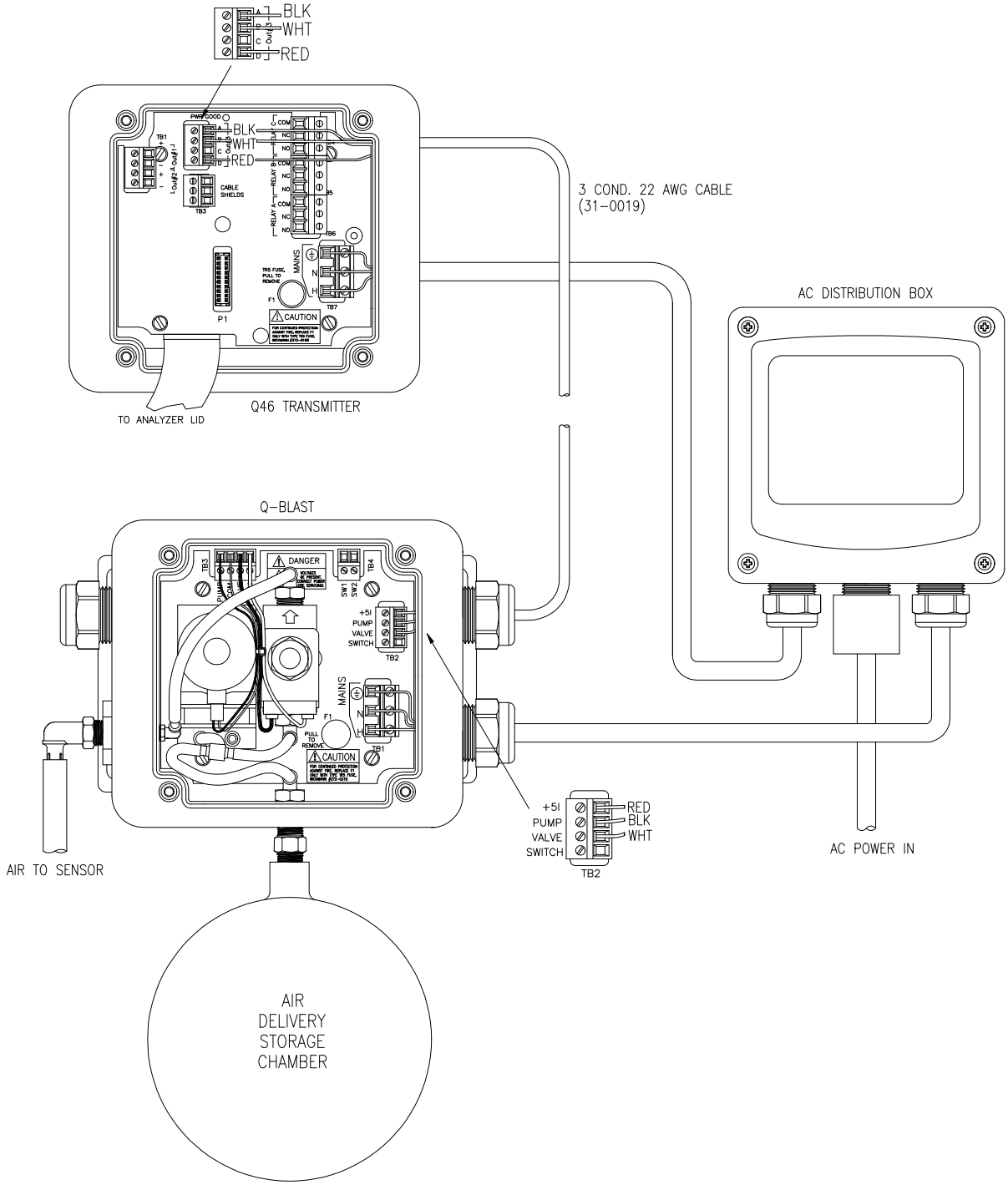

Figure 7 - Electrical Connections

3.3 Relay Wiring

Relay wiring is done to terminal blocks inside the Q46P display assembly. This unit actually contains three SPDT relays, and a bank of three low-power relays that is used to control the activation of the sensor automatic cleaning system. Relays A&B are available for use as either control relays or alarm relays. Relays C is configured as a system failure alarm.

To access the terminals for Relays A, B, and C, open the front protective cover of the analyzer. Loosen the 4 corner screws for the display unit and the front will hinge down. A terminal block labeled TB6 is accessible. The terminal block will unplug for wiring convenience, and the circuit board is screened to indicate the NO, NC and C contacts.

The terminal block labeled TB2 is used to connect leads to relays D, E, and F. These relays are prewired for control of the Q-Blast cleaner.

3.4 Built-In Heater

For installations where operating temperatures may regularly fall below 15°F (-10°C), an internal heater strip is used in the cleaner enclosure to insure that the compressor remains warm enough to operate. The diaphragm in the compressor can become quite stiff at very cold temperature resulting in failure of the compressor to start. While this will do no harm, the sensor cleaning function will be compromised. There are no heater adjustments.

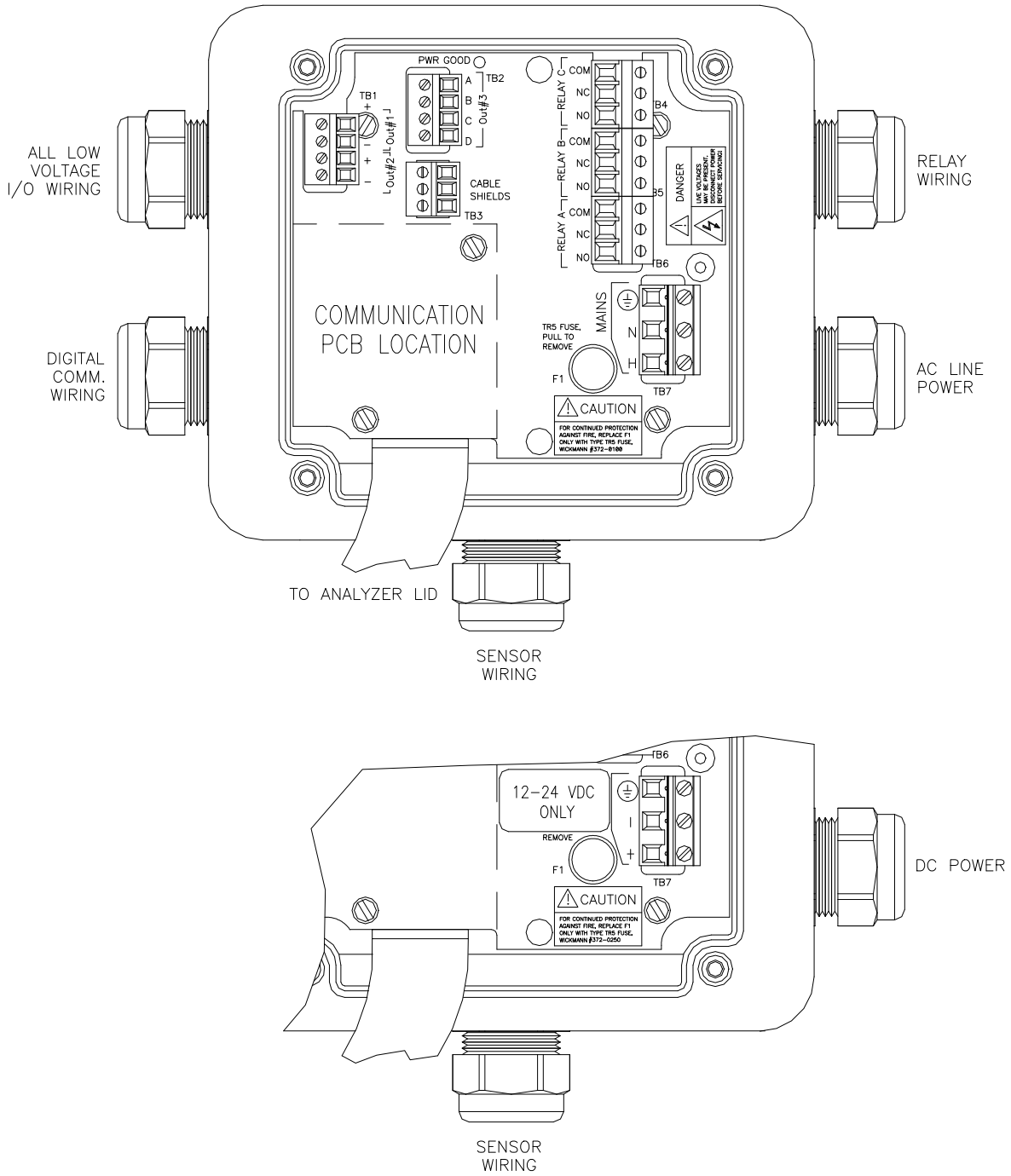

Figure 8 - Analog Output & Relay Terminals

3.5 Remote Cleaner Unit Wiring

Auto-Clean pH systems must be installed with the Q-Blast assembly no more than 60 ft. from the sensor, and preferably much closer. However, the Q46P analyzer can be installed up to 500 ft. from the cleaner assembly. This allows the pH display to be located at a convenient spot somewhat remote from the sensor/cleaner location. It does When a remote cleaner installation is required, interconnect the pH analyzer and the cleaner unit with 7-conductor, 22 AWG shielded cable as shown on Figure 7 - Electrical Connections. Do not run the interconnect cable in the same conduit with AC wiring.

Part 4 - pH Sensor

4.1 General

Autoclean pH sensors are supplied complete and ready to use. All that's needed is to make the proper sensor connections as shown in the previous section.

A rubber boot protects the end of the sensor in transit. Leave the protective boot in place until the sensor is to be placed into operation. Removal of the protective boot prior to submergence may expose the sensing element to mechanical damage that is not covered by warranty.

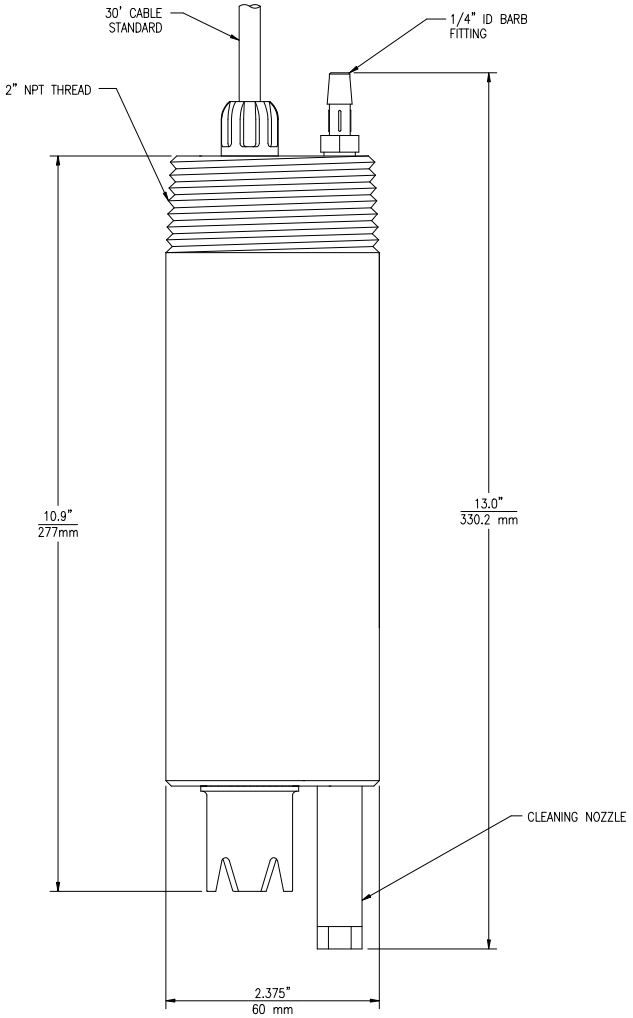

Figure 9 - Submersible pH Sensor Assy

Part 5 - Operation

5.1 User Interface

The user interface for the Q46 Series instrument consists of a custom display and a membrane keypad. All functions are accessed from this user interface (no internal jumpers, pots, etc.).

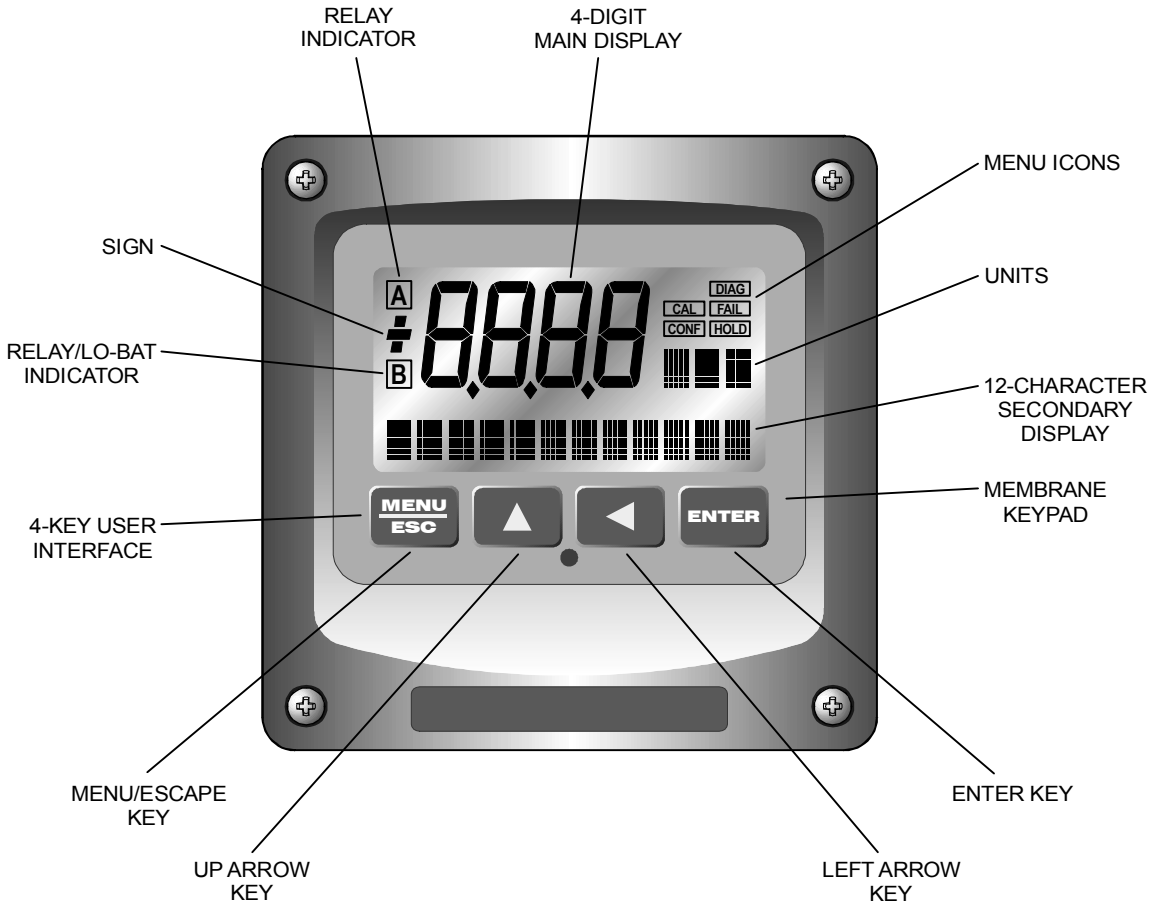

Figure 10 - User Interface

5.11 Keys

All user configurations occur through the use of four membrane keys. These keys are used as follows:

- **MENU/ESC** To scroll through the menu section headers or to escape from anywhere in software. The escape sequence allows the user to back out of any changes in a logical manner. Using the escape key aborts all changes to the current screen and backs the user out one level in the software tree. The manual will refer to this key as either MENU or ESC, depending upon its particular function.
- **UP (arrow)** To scroll through individual list or display items and to change number values.
- **LEFT (arrow)** To move the cursor from right to left during changes to a number value.
- **ENTER** To select a menu section or list item for change and to store any change.

5.12 Display

The large custom display provides clear information for general measurement use and user configuration. There are three main areas of the display: the main parameter display, the secondary message line, and the icon area.

Main Parameter

During normal operation, the main parameter display indicates the present process input with sign and units. This main display may be configured to display any of the main measurements that the system provides. During configuration, this area displays other useful set-up information to the user.

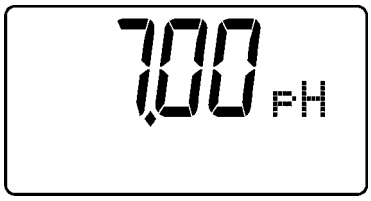

Lower Line

During normal operation, the lower line of the display indicates user-selected secondary measurements that the system is making. This also includes calibration data from the last calibration sequence and the transmitter model number and software version. During configuration, the lower line displays menu items and set-up prompts to the user. Finally, the lower line will display error messages when necessary. For a description of all display messages, refer to Section 10.31.

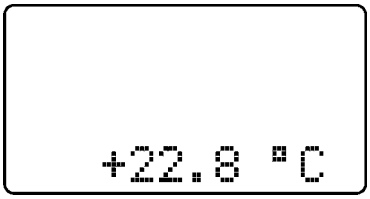

Icon Area

The icon area contains display icons that assist the user in set-up and indicate important states of system functions. The CAL, CONFIG, CTRL, and DIAG icons are used to tell the user what branch of the software tree the user is in while scrolling through the menu items. This improves software map navigation dramatically. Upon entry into a menu, the title is displayed (such as CAL), and then the title disappears to make way for the actual menu item. However, the icon stays on.

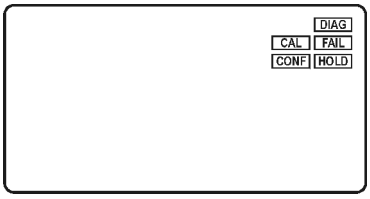

HOLD

The HOLD icon indicates that the current output of the transmitter has been put into output hold. In this case, the output is locked to the last input value measured when the HOLD function was entered. HOLD values are retained even if the unit power is cycled.

FAIL

The FAIL icon indicates that the system diagnostic function has detected a problem that requires immediate attention. This icon is automatically cleared once the problem has been resolved.

Relay Area A/B/C The relay area contains two icons that indicate the state of the system relays. Relay C status is show on the bottom line of the display.

5.2 Software

The software of the Q46P is organized in an easy to follow menu-based system. All user settings are organized under four menu sections: Measure, Calibration [**CAL**], Configuration [**CONFIG**], Control **[CONTROL]** and Diagnostics [**DIAG**].

Note: **The default Measure Menu is display-only and has no menu icon.**

5.21 Software Navigation

Within the CAL, CONFIG, CONTROL, and DIAG menu sections is a list of selectable items. Once a menu section (such as CONFIG) has been selected with the MENU key, the user can access the item list in this section by pressing either the ENTER key or the UP arrow key. The list items can then be scrolled through using the UP arrow key. Once the last item is reached, the list wraps around and the first list item is shown again. The items in the menu sections are organized such that more frequently used functions are first, while more permanent function settings are later in the list. See Figure 11 for a visual description of the software.

Each list item allows a change to a stored system variable. List items are designed in one of two forms: simple single variable, or multiple variable sequences. In the single variable format, the user can quickly modify one parameter - for example, changing temperature display units from °F to °C. In the multiple variable sequence, variables are changed as the result of some process. For example, the calibration of pH generally requires more than one piece of information to be entered. The majority of the menu items in the software consist of the single variable format type.

Any data that may be changed will be flashing. This flashing indicates user entry mode and is initiated by pressing the ENTER key. The UP arrow key will increase a flashing digit from 0 to 9. The LEFT arrow key moves the flashing digit from right to left. Once the change has been completed, pressing ENTER again stores the variable and stops the flashing. Pressing ESC aborts the change and also exits user entry mode.

The starting (default) screen is always the Measure Menu. The UP arrow key is used to select the desired display. From anywhere in this section the user can press the MENU key to select one of the four Menu Sections.

The UP arrow icon next to all list items on the display is a reminder to scroll through the list using the UP arrow key.

To select a list item for modification, first select the proper menu with the MENU key. Scroll to the list item with the UP arrow key and then press the ENTER key. This tells the system that the user wishes to perform a change on that item. For single item type screens, once the user presses the ENTER key, part or all of the variable will begin to flash, indicating that the user may modify that variable using the arrow keys. However, if the instrument is locked, the transmitter will display the message **Locked!** and will not enter user entry mode. The instrument must be unlocked by entering the proper code value to allow authorized changes to user entered values. Once the variable has been reset, pressing the ENTER key again causes the change to be stored and the flashing to stop. The message **Accepted!** will be displayed if the change is within pre-defined variable limits. If the user decides not to modify the value after it has already been partially changed, pressing the ESC key aborts the modification and returns the entry to its original stored value.

In a menu item which is a multiple variable sequence type, once the ENTER key is pressed there may be several prompts and sequences that are run to complete the modification. The ESC key can always be used to abort the sequence without changing any stored variables.

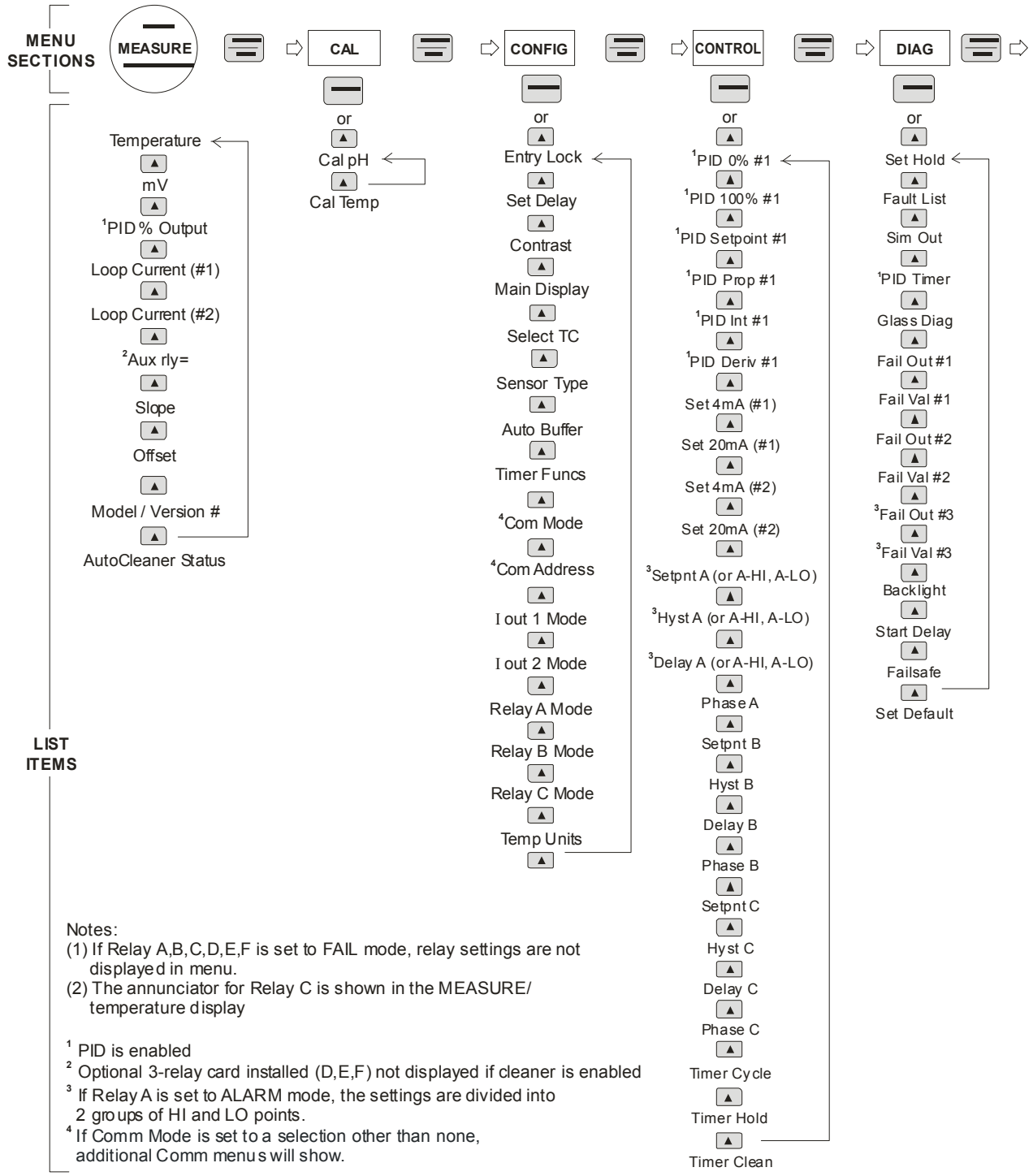

Figure 11 - Software Map

5.22 Measure Menu [MEASURE]

The default menu for the system is the display-only menu MEASURE. This menu is a display-only measurement menu, and has no changeable list items. When left alone, the instrument will automatically return to this menu after approximately 30 minutes. While in the default menu, the UP arrow allows the user to scroll through the secondary variables on the lower line of the display. A brief description of the fields in the basic transmitter version is as follows:

TRANSMITTER MEAS SCREENS:

25.7°	Temperature display. Can be displayed in °C or °F, depending on user selection. A small "m" on the left side of the screen indicates the transmitter has automatically jumped to a manual 25C setting due to a failure with the temperature signal input.
320 mV	Raw sensor signal. Useful for diagnosing problems.
100% 20.00 mA	PID Status screen (if enabled.) Shows the present controller output level on left, and actual transmitter current on the right. The controller can be placed in manual while viewing this screen by pressing and holding the ENTER key for 5 seconds until a small flashing "m" appears on the screen. At that point the controller output can be adjusted up or down using the UP and LEFT arrow keys. To return to automatic operation, press and hold the ENTER key for 5 seconds and the "M" will disappear.
#1 4.00 mA	Analyzer output current # 1.
#2 12.00 mA	Analyzer output current # 2.
Aux relay= D, E, F	Auxiliary relay annunciators (if option included.)
Slope = 100%	Sensor output response vs. ideal calibration. This value updates after each calibration. As the sensor ages, the slope reading will decay indicating sensor aging. Useful for resolving sensor problems.

Offset = 0.0 mV Sensor output signal at a zero ppm input. This value updates after a zero-calibration has been performed. Useful for resolving sensor problems.

Q46P vX.XX Transmitter software version number.

Tcyc 24.0hr Automatic sensor cleaning frequency.

Note: A display test (all segments ON) can be actuated by pressing and holding the ENTER key while viewing the model/version number on the lower line of the display.

The MEASURE screens are intended to be used as a very quick means of looking up critical values during operation or troubleshooting.

5.23 Calibration Menu [CAL]

The calibration menu contains items for frequent calibration of user parameters. There are two items in this list: Cal pH, Cal Temp.

Cal pH The pH calibration function allows the user to adjust the transmitter offset and span reading to match reference buffers, or to adjust the sensor offset to match the sample reading. See Part 5 – Calibration for more details.

Cal Temp The temperature calibration function allows the user to adjust the offset of the temperature response by a small factor of ± 5°C. The temperature input is factory calibrated to very high accuracy. However, long cable lengths and junction boxes may degrade the accuracy of the temperature measurement in some extreme situations. Therefore, this feature is provided as an adjustment. See Part 6 - Calibration for more details.

5.24 Configuration Menu [CONFIG]

The Configuration Menu contains all of the general user settings:

Entry Lock

This function allows the user to lock out unauthorized tampering with instrument settings. All settings may be viewed while the instrument is locked, but they cannot be modified. The Entry Lock feature is a toggle-type setting; that is, entering the correct code will lock the transmitter and entering the correct code again will unlock it. The code is preset at a fixed value. Press ENTER to initiate user entry mode and the first digit will flash. Use arrow keys to modify value. **See Spare Parts List at the end of this manual for the Q46P lock/unlock code.** Press ENTER to toggle lock setting once code is correct. Incorrect codes do not change state of lock condition.

Set Delay

The delay function sets the amount of damping on the instrument. This function allows the user to apply a first order time delay function to the pH measurements being made. Both the display and the output value are affected by the degree of damping. Functions such as calibration are not affected by this parameter. The calibration routines contain their own filtering and stability monitoring functions to minimize the calibration timing. Press ENTER to initiate user entry mode, and the value will flash. Use the arrow keys to modify value; range is 0.1 to 9.9 minutes. Press ENTER to store the new value.

Contrast

This function sets the contrast level for the display. The custom display is designed with a wide temperature range and contains an LED back light so that the display is can be seen in the dark.

Press ENTER to initiate user entry mode, and the value will flash. Use arrow keys to modify the value; range is 0 to 8 (0 being lightest). Press ENTER to update and store the new value.

Main Display

This function allows the user to change measurement in the primary display area. The user may select between pH, sensor temperature, or output current. Using this function, the user may choose to put temperature in the main display area and pH on the secondary, lower line of the display. Press ENTER to initiate user entry mode, and the entire value will flash. Use the UP arrow key to modify the desired display value. Press ENTER to store the new value.

Select TC

This function allows the user to select either a Pt1000 or Pt100 platinum RTD temperature element. The Pt1000 element is the standard element in all high performance Q25 sensors; it is the recommended temperature sensing element for all measurements. The Pt100 selection is provided as an alternative for use with existing combination-style sensors. Press ENTER to initiate user entry mode, and the entire value will flash. Use the UP arrow key to modify the desired value. Press ENTER to store the new value.

Sensor Type

Factory Set for Type 1 – Glass Sensor **(DO NOT ADJUST)**

Auto Buffer

This is a multiple variable function that allows the user to choose which pH buffer sets that will be utilized in the 2-point calibration mode. The Q46P contains 3 sets of built-in buffer tables with compensation values ranging from 0 to 95°C. During 2-point calibration, the instrument will automatically identify which buffer is being used and compensate for the value based on the built-in tables. This allows very quick, highly accurate calibrations by the user. The order in which the buffers are used during calibration is unimportant, since the system automatically chooses the correct buffer.

The default setting for this feature is **OFF**, which disables the auto-recognition function. Press ENTER to change this setting. The buffer table set options are: 1: [4/7/10], 2: [4/7/9.18], and 3: [4.65/6.79/9.23]. See Figure 12 for buffer tables. Once the buffer set is selected, press ENTER and the message **Accepted!** will be displayed on the lower line.

TABLE SET 1

4.00 pH		7.00 pH		10.00 pH	
°C	pH	°C	pH	°C	pH
0	4.00	0	7.10	0	10.27
10	3.99	10	7.06	10	10.15
20	4.00	20	7.02	20	10.05
30	4.01	30	6.99	30	9.95
40	4.03	40	6.97	40	9.87
50	4.05	50	6.98	50	9.80
60	4.08	60	6.98	60	9.75
70	4.12	70	6.98	70	9.73
80	4.16	80	6.99	80	9.73
90	4.21	90	7.01	90	9.75
95	4.24	95	7.01	95	9.77

TABLE SET 2

4.00 pH		7.00 pH		9.18 pH	
°C	°C	°C	pH	°C	pH
0	0	0	6.89	0	9.46
10	10	10	6.84	10	9.33
20	20	20	6.80	20	9.23
30	30	30	6.78	30	9.14
40	40	40	6.76	40	9.07
50	50	50	6.76	50	9.01
60	60	60	6.76	60	8.96
70	70	70	6.76	70	8.92
80	80	80	6.78	80	8.89
90	90	90	6.80	90	8.85
95	95	95	6.80	95	8.83

TABLE SET 3

4.65 pH		6.79 pH		9.23 pH	
°C	pH	°C	pH	°C	pH
0	4.67	0	6.89	0	9.48
10	4.66	10	6.84	10	9.37
20	4.65	20	6.80	20	9.27
30	4.65	30	6.78	30	9.18
40	4.66	40	6.76	40	9.09
50	4.68	50	6.76	50	9.00
60	4.70	60	6.76	60	8.92
70	4.72	70	6.76	70	8.88
80	4.75	80	6.78	80	8.85
90	4.79	90	6.80	90	8.82
95	4.79	95	6.80	95	8.82

Figure 12 - Automatic pH Buffer Tables

Timer Funcs Enables the Autocleaner Logic on Relays D, E, and F. When enabled, these auxiliary relays control the remote autocleaner enclosure. The autocleaner enclosure provides automatic sensor cleaning using a highly effective air-blast system that is self contained in the AC enclosure. When enabled, the D, E and F relay settings are not displayed in the CONFIG or CNTRL menus.

Com Mode Sets digital communication mode of analyzer. Optional digital communication card must be plugged into the power supply slot for this function to work. Press ENTER to initiate user entry mode, and the entire value will flash. Use the UP arrow key to modify the desired value; selections include 1-Modb for Modbus, 2- P-DP for Profibus DP. Press ENTER to store the new value.

Com Address Sets bus address for digital communication mode of analyzer. Optional digital communication card must be plugged into the power supply slot for this function to work.

Press ENTER to initiate user entry mode, and the entire value will flash. Use the UP arrow key to modify the desired value. Range is 1-125. Press ENTER to store the new value.

Iout#1 Mode This function sets analog output #1 to either track pH or enables the PID controller to operate on the pH input. Press ENTER to initiate user entry mode, and the entire value will flash. Use the UP arrow key to modify the desired value; selections include 1- for pH tracking or 2-PID for pH PID control. Press ENTER to store the new value.

***Iout#2 Mode** This function sets analog output #2 for either temperature (default) or pH. Press ENTER to initiate user entry mode, and the entire value will flash. Use the UP arrow key to modify the desired value; selections include 1-C/F for temperature or 2-pH. Press ENTER to store the new value.

***Rly A Mode** Relay A can be used in three different ways: as a setpoint control, as a fail alarm, or as a HI-LO alarm band. The three settings for Rly A Mode are **CON**, **FAIL** and **AL**.

The CON setting enables normal control operation for Relay A, with settings for setpoint, hysteresis, delay and phasing appearing in the CONFIG menu automatically. See Figure 14 for further details.

The **FAIL** setting enables the fail alarm mode for Relay A. Relay A will then trip on any condition that causes the FAIL icon to be displayed on the LCD. Using this mode allows the User to send alarm indications to other remote devices.

The **AL** setting allows two setpoints to be selected for the same relay, producing a HI-LO alarm band. In this mode, Relay A will trip inside or outside of the band, depending upon the Phase selected. See Figure 14 for further details.

***Relay B Mode**

The settings for Relay B Mode are identical to the corresponding modes on Relay A.

Relay C Mode

Relay C can be used in two ways: as a setpoint control, or as an alarm. The two settings for Relay C Mode are **CON** and **FAIL**.

The CON setting enables normal setpoint operation for Relay B/C. Relay B/C then operates identically to Relay A, with settings for setpoint, hysteresis, delay and phasing appearing in the CONFIG menu automatically. See Figure 13 for details.

The **FAIL** setting enables the fail alarm mode for Relay B/C. Relay B/C will then trip on any condition that causes the FAIL icon to be displayed on the LCD. Note that the Relay C indicator shows up only on the lower screen of the display next to the temperature reading. This is because the default setting for relay C is the **FAIL** setting. Using this mode allows the User to send alarm indications to other remote devices. See Figure 14 for details.

Temp Units

This function sets the display units for temperature measurement. Press ENTER to initiate user entry mode, and the entire value will flash. Use the UP arrow key to modify the desired display value. The choices are **°F** and **°C**. Press ENTER to store the new value.

5.25 Control Menu [CONTROL]

The Control Menu contains all of the output control user settings. Note that PID menu items will not appear unless output 1 is configured for PID mode in the CONFIG menu.

Set PID 0%
Set PID 100%
[Iout1=PID]

If the PID is enabled, this function sets the minimum and maximum controller end points. Unlike the standard 4-20 mA output, the controller does not “scale” output values across the endpoints. Rather, the endpoints determine where the controller would normally force minimum or maximum output in an attempt to recover the setpoint (even though the controller can achieve 0% or 100% anywhere within the range.)

If the 0% point is lower than the 100% point, then the controller action will be “reverse” acting. That is, the output of the controller will increase if the measured value is less than the setpoint, and the output will decrease if the measured value is larger than the setpoint. Flipping the stored values in these points will reverse the action of the controller to “direct” mode.

The entry value is limited to a value within the range specified in “Set Range”, and the 0% and the 100% point must be separated by at least 1% of this range Use the LEFT arrow key to select the first digit to be modified. Then use the UP and LEFT arrow keys to select the desired numerical value. Press ENTER to store the new value.

PID Setpnt
[Iout1=PID]

The measured value which the controller is attempting to maintain by adjusting output value. It is the nature of the PID controller that it never actually gets to the exact value and stops. The controller is continually making smaller and smaller adjustments as the measured value gets near the setpoint.

PID Prop
[Iout1=PID]

Proportional gain factor. The proportional gain value is a multiplier on the controller error (difference between measured value and setpoint value.) Increasing this value will make the controller more responsive.

PID Int
[Iout1=PID]

Integral is the number of "repeats-per-minute" of the action of the controller. It is the number of times per minute that the controller acts on the input error. At a setting of 2.0 rpm, there are two repeats every minute. If the integral is set to zero, a fixed offset value is added to the controller (manual reset.) Increasing this value will make the controller more responsive.

PID Deriv
[Iout1=PID]

Derivative is a second order implementation of Integral, used to suppress "second-order" effects from process variables. These variables may include items like pumps or mixers that may have minor impacts on the measured value. The derivative factor is rarely used in water treatment process, and therefore, it is best in most cases to leave it at the default value. Increasing this value will make the controller more responsive.

Set 4 mA
Set 20 mA
[Iout1=pH]

These functions are used to modify the first 4-20 mA current output setpoints for the transmitter. The units displayed depend on the selection made in the CONFIG menu for Iout #1 Mode.

The value stored for the 4 mA point may be higher or lower than the value stored for the 20 mA point. The entry values are limited to values within the range specified in "Set Range", and the 4 mA and the 20 mA point must be separated by at least 1% of this range Use the LEFT arrow key to select the first digit to be modified. Then use the UP and LEFT arrow keys to select the desired numerical value. Press ENTER to store the new value.

***Set 4 mA #2**
***Set 20 mA #2**
[temp/pH]

These functions are used to modify the second 4-20 mA current output setpoints for the transmitter. The output may be set to track temperature (default) or pH. The values stored for the 4 mA point may be higher or lower than the value stored for the 20 mA point.

The entry value is limited to a value between 0 and 55°C if it is set for temperature and must be within 0 - 14 if set to track pH. The 4 mA and the 20 mA point must be at least 2 units away from each other. Press ENTER to initiate user entry mode, and the value will flash. Use arrow keys to modify value. Press ENTER to store the new value.

*NOTE: I*f the temperature units are changed between °C and °F (see Temp Units in this section), the default settings for this output will be stored (present data is not converted.)

***A Setpoint** This function establishes the pH trip point for relay A. Use the LEFT arrow key to select the first digit to be modified. Then use the UP and LEFT arrow keys to select the desired numerical value. Press ENTER to store the new value.

***A Hysteresis** This function establishes the hysteresis, or “deadband”, for Relay A. Hysteresis is most often used to control relay chattering; however, it may also be used in control schemes to separate the ON/OFF trip points of the relay. Press ENTER to initiate user entry mode, and the value will flash. Use the arrow keys to modify value. Press ENTER to store the new value.

***A Delay** This function places an additional amount of time delay on the trip point for relay A. This delay is in addition to the main delay setting for the controller. The entry value is limited to a value between 0 and 999 seconds. Press ENTER to initiate user entry mode, and the value will flash. Use arrow keys to modify value; range is 0 to 999 seconds. Press ENTER to store the new value.

***A Phasing** This function establishes the direction of the relay trip. When phase is HI, the relay operates in a direct mode. Therefore, the relay energizes and the LCD indicator illuminates when the pH value **exceeds** the setpoint. When the phase is LO, the relay energizes and the LCD indicator illuminates when the pH level drops **below** the setpoint. The failsafe setting does have an impact on this logic. The description here assumes the failsafe setting is OFF. Press ENTER to initiate user entry mode, and the entire value will flash. Use the UP arrow key to modify the desired value; selections include **HI** for direct operation or **LO** for reverse

operation. Press ENTER to store the new value. See Figure 13 below for a visual description of a typical control relay application.

When value rises to ≥ 9.00 pH, relay closes.

When value falls to ≤ 8.95 pH, relay opens.

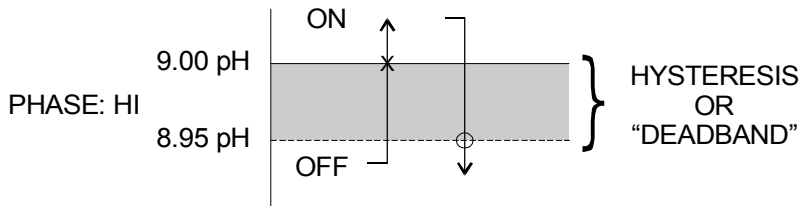

Setpoint:	9.00 pH
Hyst:	0.05
Delay:	000
Failsafe:	OFF

When value rises to ≥ 9.05 pH, relay opens.

When value falls to ≤ 9.00 pH, relay closes.

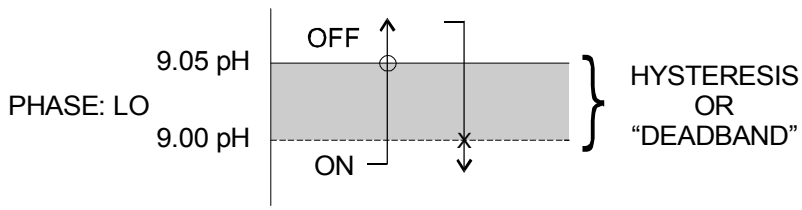

Figure 13 - Control Relay, Hysteresis & Phase Options

***Setpnt A-HI**
***Hyst A-HI**
***Delay A-HI**
***Setpnt A-LO**
***Hyst A-LO**
***Delay A-LO**

If Relay A Mode is set to Alarm Mode, **AL**, then the following settings will appear in the Config Menu list automatically. In this mode, two setpoints can be selected on the same relay, to create an alarm band. Phase HI selection causes the relay to energize outside of the band, and Phase LO causes the relay to energize inside of the band. This feature enables one relay to be used as a control relay while the other is used as a HI-LO Alarm relay at the same time. Setpoint A-LO must be set lower than Setpoint A-HI. When AL mode is first selected, Setpoint A-LO is defaulted to 0.

Figure 14 is a visual description of a typical alarm relay application.

When value rises to ≥ 9.00 pH, relay closes, until value falls back to ≤ 8.95

When value falls to ≤ 9.00 pH, relay closes, until rises back to ≥ 9.05 pH

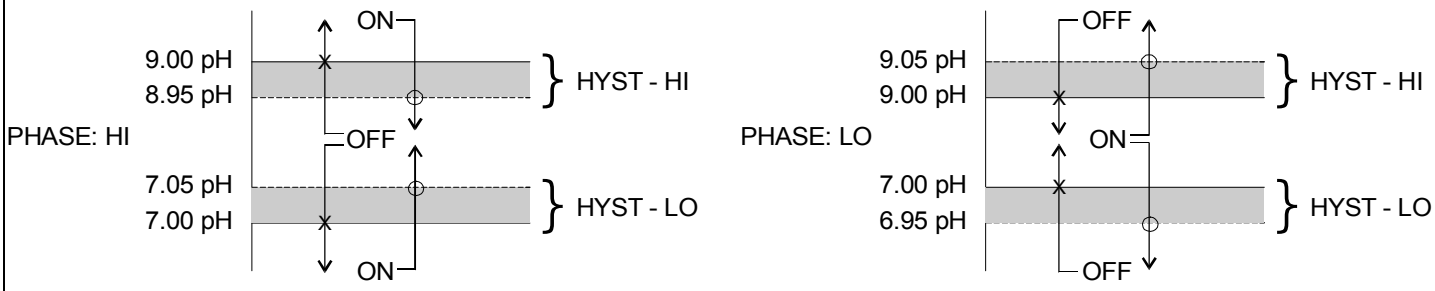

Setpoint A-HI: 9.00 pH
Hyst A-HI: 0.050
Delay A-HI: 000

Setpoint A-LO: 7.00 pH
Hyst A-LO: 0.05 pH
Delay A-LO: 000

When value falls to ≤ 7.00 pH, relay closes, until value rises back to ≥ 7.05 pH

When value rises to ≥ 7.00 pH, relay closes, until value falls back to ≤ 6.95 pH

Figure 14 - Alarm Relay Example

***B Setpoint** ***B Hysteresis** ***B Delay** ***B Phasing**

If Relay B Mode is set to **CON**, then Relay B will function identically to Relay A. Relay B settings appear in the CONFIG menu list automatically.

C Setpoint **C Hysteresis** **C Delay** **C Phasing**

If Relay C Mode is set to **CON** (see **Relay C Mode**), then Relay C will function identically to Relay A. Relay C settings appear in the CONFIG menu list automatically.

***Timer CLEAN**
***Timer CYCLE**
***Timer HOLD**

When Timer Funcs is set to **CLn1** mode (Factory Default), Submenu **Timer B CLEAN** is not active. When Relay B is set to **CLn2** (For Customer supplied Air Delivery Source) all three submenu Timer B settings appear in the CONTROL menu list.

Relay B will toggle open/closed based on the time settings entered by the user. The timer **CLEAN** setting controls the amount of time that Relay B is engaged (N.O. contact closed), and the timer CYCLE setting controls the amount of time that Relay B is released (N.O. contact open.)

The timer **HOLD** setting allows an output hold time to be entered into the cleaning cycle. This hold time allows the outputs to stabilize back to normal readings before the outputs are released from their “hold” state. Using this feature properly avoids disturbing any instruments connected to the outputs during the cleaning cycle – where PH readings can fluctuate.

To change the values for Timer **CLEAN**, **CYCLE**, and **HOLD**, press ENTER to initiate user entry mode, and entire value will flash. Use the UP arrow key to modify the desired value. Selections for each variable are: CLEAN 1-10 minutes, CYCLE 1-999 hours, HOLD 0-999 minutes. Press ENTER to store the new value.

Example: If the timer-CLEAN setting is 1 minute, the timer CYCLE setting is 24 hours, and the timer-HOLD setting is 3 minutes, the following sequence will occur: At the instant the timer is enabled (or data for the CLEAN/CYCELE/HOLD is modified) the “CYCLE” time period begins. Once the 24-hour CYCLE period ends, the outputs will be put in hold and relay B will engage for 1 minute (CLEAN time.) After the 1 minute has expired, relay B will be released but the hold will stay locked in for an additional 3 minutes (HOLD time), retaining the original output signals. Once the 3 minutes expire, the outputs will be released back to the normal monitoring state. Then, the entire cycle will repeat – approximately once per day.

Note: The sensor wash timer is not based on a "real-time" clock circuit. Therefore, the time accuracy is only within about 10 minutes per day.

Note: A timer wash cycle can be manually started by pressing and holding the ENTER key for a few seconds while viewing the timer status screen in the MEAS menu. The timer must be in the "Tcyc" state to allow a manual start. After this forced cycle, the system will return to normal.

If the B mode selection is changed while the sensor wash timer is in mid-cycle (and the HOLD is enabled), the HOLD must be turned off manually to return all of the outputs to normal operation. A flashing "T" will be seen on the lower line of the display next to temperature while the probe cleaner function is operating.

5.26 Diagnostics Menu [DIAG]

The diagnostics menu contains all of the user settings that are specific to the system diagnostic functions, as well as functions that aid in troubleshooting application problems.

Set Hold

The Set Hold function locks the current loop output values on the present process value and holds relays in current status. This function can be used prior to calibration, or when removing the sensor from the process, to hold the output in a known state. Once HOLD is released, the outputs return to their normal state of following the process input. The transfer out of HOLD is bumpless on the both analog outputs - that is, the transfer occurs in a smooth manner rather than as an abrupt change. An icon on the display indicates the HOLD state, and the HOLD state is retained even if power is cycled. Press ENTER to initiate user entry mode, and entire value will flash. Use the UP arrow key to modify the desired value, selections are **ON** for engaging the HOLD function, and **OFF** to disengage the function. Press ENTER to store the new value.

The Set Hold function can also hold at an output value specified by the user. To customize the hold value, first turn the HOLD function on. Press the ESC key to go to the DIAG Menu and scroll to Sim Output using the UP arrow key.

Press ENTER. Follow the instructions under Sim Output (see following page).

Fault List

The Fault List screen is a read-only screen that allows the user to display the cause of the highest priority failure. The screen indicates the number of faults present in the system and a message detailing the highest priority fault present. Note that some faults can result in multiple displayed failures due to the high number of internal tests occurring. As faults are corrected, they are immediately cleared.

Faults are not stored; therefore, they are immediately removed if power is cycled. If the problem causing the faults still exists, however, faults will be displayed again after power is re-applied and a period of time elapses during which the diagnostic system re-detects them. The exception to this rule is the calibration failure. When a calibration fails, no corrupt data is stored. Therefore, the system continues to function normally on the data that was present before the calibration was attempted.

After 30 minutes or if power to the transmitter is cycled, the failure for calibration will be cleared until calibration is attempted again. If the problem still exists, the calibration failure will re-occur. Press ENTER to initiate view of the highest priority failure. The display will automatically return to normal after a few seconds.

PID Timer

This function sets a timer to monitor the amount of time the PID controller remains at 0% or 100%. This function only appears if the PID controller is enabled. If the timer is set to 0000, the feature is effectively disabled. If the timer value is set to any number other zero, a FAIL condition will occur if the PID controller remains at 0% or 100% for the timer value. If one of the relays is set to FAIL mode, this failure condition can be signaled by a changing relay contact.

Press ENTER to initiate user entry mode, and the entire value will flash. Use the UP arrow key to modify desired value; range of value is 0-9999 seconds. Press ENTER to store the new value.

Sim Out

The Sim Out function allows the user to simulate the pH level of the instrument in the user selected display range. The user enters a ppm value directly onto the screen, and the output responds as if it were actually receiving the signal from the sensor. This allows the user to check the function of attached monitoring equipment during set-up or troubleshooting. Escaping this screen returns the unit to normal operation. Press ENTER to initiate the user entry mode, and the right-most digit of the value will flash. Use arrow keys to modify desired value.

The starting display value will be the last read value of the input. The output will be under control of the SIM screen until the ESC key is pressed.

Note: If the HOLD function is engaged before the Sim Output function is engaged, the simulated output will remain the same even when the ESC key is pressed. Disengage the HOLD function to return to normal output.

Fail Out #1

This function enables the user to define a specified value that the main current output will go to under fault conditions. When enabled to **ON**, the output may be forced to the current value set in **Fail Val** (next item.) With the Fail Out setting of ON, and a Fail Val setting of 6.5 mA, any alarm condition will cause the current loop output to drop outside the normal operating range to exactly 6.5 mA, indicating a system failure that requires attention.

Press ENTER to initiate user entry mode, and the entire value will flash. Use the UP arrow key to modify desired value; selections are **ON**, **OFF**. Press ENTER to store the new value.

Fail Val #1

Sets the output failure value for Iout#1. When **Fail Out** above is set to **ON, t**his function sets value of the current loop under a FAIL condition. When the Relay Option Board is installed, the display will read **Fail Out #1**. The output may be forced to any current value between 4-20 mA.

Press ENTER to initiate user entry mode, and the entire value will flash. Use the UP arrow key to modify desired value; selections are between **4mA**, and **20mA**. Press ENTER to store the new value.

Fail Out #2 This function sets the fail-mode of current loop output #2 under a FAIL condition. The settings and operation are identical to Fail Out for output #1.

Fail Val #2 This function sets the value of current loop output #2 under a FAIL condition. The settings and operation are identical to Fail Out for output #1.

Backlight This function has three options. **ON** – On all the time, **OFF** – Off all the time, **AL** – Alarm (Default). This function flashes the backlight on and off whenever the Fail icon is displayed.

Start Delay This function is designed to minimize control or alarm issues arising from temporary power loss. When power goes down, the monitor records the analog output values and the status of relays and PID functions. When power is restored, the analog values and relays will be held at the pre-power loss values for a defined period of time. This “start delay” may be programmed for periods from 0-9.9 minutes. This function is set to 0.0 minutes by default and must be activated by the user if desired by setting a positive time value.

***Failsafe** This function allows the user to set the optional system relays to a failsafe condition. In a failsafe condition, the relay logic is reversed so that the relay is electrically energized in a normal operating state. By doing this, the relay will not only change state when, for example, a pH limit is exceeded, but also when power is lost to the controller.

When failsafe is selected to be ON, the normally-open contacts of the relay will be closed during normal operation. In an attempt to make this configuration less confusing, the LCD icon logic is reversed with this setting, and the icon is OFF under this normal condition. Therefore, when the trip condition occurs, the closed N.O. contacts will be opened (relay de-energized), and the LCD icon will illuminate. In addition, a power fail would also cause the same contacts to open.

Set Default

The Set Default function allows the user to return the instrument back to factory default data for all user settings or for just the calibration default. It is intended to be used as a last resort troubleshooting procedure. All user settings or the calibration settings are returned to the original factory values. Hidden factory calibration data remains unchanged.

Press ENTER to initiate user entry mode and select either **CAL** or **ALL** with the UP arrow key. The default CAL routine will reset the zero offset to 0.0 mV and reset the slope to 100%. The default ALL routine will reset all program variables to factory default and should be used with care since it will change any user settings that were programmed in the field..

Part 6 - Calibration

6.1 Overview and Methods

Since the sensor slope (mV/pH output) will degrade over time, the instrument must be calibrated periodically to maintain a high degree of measurement accuracy. Frequency of calibration must be determined by the application. High temperature applications or applications involving extreme pH operating conditions may require more frequent calibration than those that operate at more neutral pH levels and ambient level temperatures. It is important for the user to establish a periodic cleaning and calibration schedule for sensor maintenance to maintain high system accuracy.

Before calibrating the instrument for the very first time after initial installation, it is important to select the proper operating parameters in the configuration menus for items like Sensor Type and Auto Buffers.

If Auto Buffers is not enable, select buffers with values that are close to the normal operating pH of the process. For example, if the process is operating normally at 8 pH, buffer values of 9.18 pH and 7.00 pH are preferred over buffers of 4.00 pH and 7.00 pH. If possible, select one of the buffers to be near 7.00 pH.

NOTE: Buffers must be at least 2 pH units apart to ensure accurate calibration.

The system provides two methods of pH calibration: 2-point and 1-point. These two methods are significantly different. See Sections 5.13 and 5.14 for a brief description of their uses.

6.2 Sensor Slope

The sensor slope is a number (expressed as a percentage) which represents the current condition of the sensor electrodes. The slope display is updated after every calibration. When new, the sensor slope should be between 95% and 105%. A 100% slope represents an ideal sensor output of 59.16 mV/pH, from standardization (7.00 pH at 25°C). Over time, the glass electrodes in the sensor will age with use. This results in a reduction of the slope (mV/pH output) of the sensor. Thus a sensor slope of 85% is equivalent to an output of 50.29 mV/pH from standardization. The instrument will not allow calibrations on a sensor with a slope less than 80%. The slope information from the most recent

calibration can be viewed at any time in the Measure Menu.

6.3 Sensor Offset

Sensor offset is a number that indicates sensor output (expressed in mV) in 7.00 pH buffer at 25 ºC. Ideally, the sensor will output 0 mV under these conditions. A sensor offset reading of +10 mV indicates that the sensor will output +10 mV when placed into a perfect 7.00 pH buffer at 25 ºC. In other words, sensor offset shifts the entire mV/pH curve up or down. Sensor offset is generally produced by a small voltage drop at the sensor reference junction. Large offsets are most typically the result of foulants on the reference junction, an aged reference junction, or a weak reference fill solution. The instrument does not allow calibrations on a sensor with an offset greater than +90 mV or less than –90 mV. Sensor offset information from the most recent calibration can be viewed at any time in the Measure Menu (See Section 4.22).

6.4 2-Point Calibration Explained

The 2-point calibration method involves the movement of the sensor through two known pH buffer values. Therefore, the sensor must be removed from the application to utilize this method. Two-point calibration adjusts both the slope and the offset of the sensor. It is the recommended method of calibration for highest accuracy. In addition, this calibration method utilizes an automatic buffer recognition and compensation method.

IMPORTANT: the 2-point calibration mode MUST be performed when a new sensor is first put into operation so that accurate calibration data is available for possible later 1-point calibrations.

6.5 1-Point Calibration Explained

The 1-point calibration method is generally known as the "grab sample" calibration method. In the 1-point calibration method, the sensor may be removed from the application and placed into one buffer. It may also be left in the measurement process and calibrated by reference. 1-point calibration adjusts only the sensor offset. Since the sensor slope degrades much slower than the sensor offset, this method may be used as a frequent calibration method between more involved 2-point calibrations. For example, a user may choose to perform on-line 1-point calibrations weekly and 2-point calibrations monthly.

6.6 Performing a 2-Point Calibration

The 2-point calibration method utilizes an automatic buffer recognition and compensation system. For this system to operate properly, the user must first configure the proper buffers in the Auto Buffer screen (see Section 4.24). If the buffers are not present in this menu, the user can override the automatic values and enter arbitrary values. However, the highest accuracy is provided when the user selects and uses buffers from this pre-defined table list. With the pre-defined buffers, the temperature variations in the buffer are automatically compensated for during the calibration process. If the buffer data is manually entered, the calibration buffer sample must be very temperature stable to achieve the same degree of accuracy.

Procedure

1. Remove sensor from application. Rinse and clean if necessary.

2. Allow sensor to temperature equilibrate with the buffer as best as possible. With the sensor coming from an application solution that differs greatly in temperature from the buffer, the user may have to wait as much as 20 minutes for this to occur.

3. Scroll to the CAL menu section using the MENU key and press ENTER or the UP arrow key. **Cal pH** will then be displayed.

4. Press the ENTER key. The screen will display a flashing 1 for 1-point or a 2 for 2-point calibration. Using the UP arrow key, set for a 2-point calibration and press ENTER.

5. The display will prompt the user to place the sensor in the first buffer and press ENTER. If the sensor has been placed into this buffer already, once the temperature has stabilized, press ENTER to continue.
6. The present pH value will be displayed and the secondary line of the display will flash **Wait** for approximately 10-15 seconds. At this time the system is attempting to recognize the first buffer value from the two values entered into the Set Buffers selection.

7. The screen will display the buffer value to be used for calibration. If the user chooses to change this value, the arrow keys can be used to modify the value. Any value between 0.00 and 14.00 pH can be entered. After adjusting this value, or to accept the automatic value, press ENTER.
8. The system now begins acquiring data for the calibration value of this buffer point. As data is gathered, the units for pH and temperature may begin to flash. Flashing units indicates that this parameter is unstable. The data point acquisition will stop only when the data remains stable for a pre-determined amount of time. This can be overridden by pressing ENTER. If the data remains unstable for 10 minutes, the calibration will fail and the message **Cal Unstable** will be displayed.
9. Once the first calibration value has been established, the screen will prompt the user to move the sensor to the second buffer. At this point, rinse sensor with water and move the sensor into the second buffer solution. Allow temperature to stabilize, and then press ENTER.
10. The present pH value will be displayed and the secondary line of the display will flash **Wait** for approximately 10-15 seconds. At this time the system is attempting to recognize the second buffer value from the two values entered into the Set Buffers selection.
11. The screen will display the buffer value to be used for calibration. If the user chooses to change this value, the arrow keys can be used to modify the value. Any value between 0.00 and 14.00 pH can be entered. The second buffer must be at least 2 pH units away from the first. After adjusting this value, or to accept the automatic value, press ENTER.
12. The system now begins acquiring data for the calibration value of this buffer point. As data is gathered, the units for pH and/or temperature may again flash, indicating unstable parameters.
13. If accepted, the screen will display the message **PASS** with the new slope and offset readings, then it will return to the main measurement display. If the calibration fails, a message indicating the cause of the failure will be displayed and the FAIL icon will be turned on.

The sensor offset value in % from the last span calibration is displayed on the lower line of the Default Menus for information purposes.

6.7 Performing a 1-Point Calibration

The 1-point, or sample calibration method does not utilize the automatic buffer recognition and compensation system. This calibration method is intended to be primarily used as an on-line calibration method, in which the actual calibration point will not be a buffer value. However, the sensor can be removed and calibrated in a separate buffer. During calibration, the system will display the current pH reading and the user can manually enter a reference value from a lab grab-sample or a comparative reference instrument.

Procedure

1. Determine whether the calibration will be done on-line or with the sensor removed and placed into a buffer. If the sensor is removed from the application, rinse and clean if necessary.

2. If the sensor has been removed and placed into a buffer, allow sensor to temperature equilibrate with the buffer as much as possible. With the sensor coming from an application which differs greatly in temperature difference, the user may have to wait as much as 20 minutes. If the sensor is on-line, the user may want to set the output HOLD feature prior to calibration to lock out any output fluctuations.

3. Scroll to the CAL menu section using the MENU key and press ENTER or the UP arrow key. **Cal pH** will then be displayed.

4. Press the ENTER key. The screen will display a flashing 1 for 1-point or a 2 for 2-point calibration. Using the UP arrow key, set for a 1-point calibration and press ENTER.

5. The system now begins acquiring data for the calibration value. As data is gathered, the units for pH and temperature may flash. Flashing units indicate that this parameter is unstable. The calibration data point acquisition will stop only when the data remains stable for a pre-determined amount of time. This can be overridden by pressing ENTER. If the data remains unstable for 10 minutes, the calibration will fail and the message **Cal Unstable** will be displayed.

6. The screen will display the last measured pH value [or the auto buffer value, if activated] and a message will be displayed prompting the user for the lab value. The user must then modify the screen value with the arrow keys and press ENTER. The system then performs the proper checks.

7. If accepted, the screen will display the message **PASS** with the new offset reading, and then it will return to the main measurement display. If the calibration fails, a message indicating the cause of the failure will be displayed and the FAIL icon will be turned on.

6.8 Temperature Calibration

The temperature input is factory calibrated for the highest accuracy. Temperature calibration is not recommended; however, it is provided for applications in which very long cable lengths are needed. For example, at 50 feet, readings may be off ± 0.2°C.

The temperature calibration sequence is essentially a 1-point offset calibration that allows adjustments of approximately ± 5°C.

The sensor temperature may be calibrated on line, or the sensor can be removed from the process and placed into a known solution temperature reference. In any case, it is critical that the sensor be allowed to reach temperature equilibrium with the solution in order to provide the highest accuracy. When moving the sensor between widely different temperature conditions, it may be necessary to allow the sensor to stabilize as much as one hour before the calibration sequence is initiated. If the sensor is on-line, the user may want to set the output HOLD (see Page 42) feature prior to calibration to lock out any output fluctuations.

Procedure

1. Scroll to the CAL menu section using the MENU key and press ENTER or the UP arrow key.

2. Press the UP arrow key until **Cal Temp** is displayed.

3. Press the ENTER key. The message **Place sensor in solution then press ENTER** will be displayed. Move the sensor into the calibration reference (if it hasn't been moved already) and wait for temperature equilibrium to be achieved. Press ENTER to begin the calibration sequence.

4. The message **Adjust temp value then press ENTER** will be displayed, and the right-most digit will begin to flash, indicating that the value can be modified. Using the UP and LEFT arrow keys, modify the value to the known ref solution temperature. Adjustments up to ± 5°C from the factory calibrated temperature are allowed. Press ENTER.

5. The calibration data gathering process will begin. The message **Wait** will flash as data is accumulated and analyzed. The **°C** or **°F** symbol may flash periodically if the reading is too unstable.

6. Once completed, the display will indicate **PASS** or **FAIL**. If the unit fails, the temperature adjustment may be out of range, the sensor may not have achieved complete temperature equilibrium, or there may be a problem with the temperature element. In the event of calibration failure, it is recommended to attempt the calibration again immediately.

Part 7 - Sensor Auto-Clean System

7.1 General

The cleaner control system located in the cleaner enclosure contains a number of components designed to supply pulses of high pressure air to the tip of the sensor. The main components and their function are as follows:

Compressor: The air compressor is a small DC powered diaphragm type compressor that delivers air at up to 30 PSI to the accumulator cylinder which is part of the system. The compressor cannot provide an output above 30 PSI (2 Bar) so no special pressure relief is required in the system.

Accumulator: The accumulator is a 3 1/2" diameter stainless steel chamber that is pressurized with air from the compressor. The accumulator allows a relatively high volume of air to be delivered with each cleaning pulse, increasing the effectiveness of the cleaner.

Solenoid Valve: The solenoid valve on the outlet of the accumulator controls the flow of cleaning pulses to the nozzle located on the sensor assembly. The solenoid is opened and closed under the control of the sequencing module.

The operation of the cleaner control system is completely automatic. There are no customer adjustments required. The only requirement is that the pH analyzer be set for AUTO mode of operation and that the desired cleaning frequency be programmed.

7.2 Cleaner Sequence

The cleaner control system is designed to provide three 3-second pulses of pressurized air through a nozzle located within 1 inch of the sensor face. The nozzle directs the air blast at the center of the sensor, effectively blasting away accumulated coatings on the surface.

The cleaner sequence begins with the closure of relay D in the display module. The sequencing system contains a relay that turns on the compressor and releases air to the cleaner nozzle when the accumulator has been charged. The entire cycle takes about 90 seconds.

During the cycle, the compressor will run for 40 seconds to charge the accumulator. At this point, the sequencing system will open the solenoid valve for 3 seconds, discharging air through the solenoid valve and out to the cleaner nozzle at the sensor. This delivers a 3 second high velocity air blast across the face of the sensor. After 3 seconds, the solenoid will close, allowing the accumulator to recharge for 20 seconds. This cycle repeats itself three times, after which the compressor shuts off. The solenoid will release the final air burst shortly after the compressor shuts off so that no pressure remains in the accumulator.

Once the air cleaning system has run through a cycle, it will remain in standby while waiting for the next activation signal from the PH monitor. This will normally occur every 24 hours, but can be activated manually at any time as explained previously.

The cleaner can be started **manually** any time the monitor is in operation. From the Measure Menu, press the UP arrow until the bottom line of the display indicates “Tcycle xx Hrs”. Then press and hold the ENTER key for about 3 seconds to start the cleaning cycle. You will hear the compressor activate.

Part 8 - PID Controller Details

8.1 PID Description

PID control, like many other control schemes, is used in chemical control to improve the efficiency of chemical addition or control. By properly tuning the control loop that controls chemical addition, only the amount of chemical that is truly required is added to the system, saving money. The savings can be substantial when compared to a system which may be simply adding chemical at a constant rate to maintain some minimal addition under even the worst case conditions. The PID output controller is highly advantageous over simple control schemes that just utilize direct (proportional only) 4-20 mA output connections for control, since the PID controller can automatically adjust the “rate” of recovery based on the error between the setpoint and the measured value – which can be a substantial efficiency improvement..

The PID controller is basically designed to provide a “servo” action on the 4-20 mA output to control a process. If the user requires that a measured process stay as close as possible to a specific setpoint value, the controller output will change from 0% to 100% in an effort to keep the process at the setpoint. To affect this control, the controller must be used with properly selected control elements (valves, proper chemicals, etc.) that enable the controller to add or subtract chemical rapidly enough. This is not only specific to pumps and valves, but also to line sizes, delays in the system, etc.

This section is included to give a brief description of tuning details for the PID controller, and is not intended to be an exhaustive analysis of the complexities of PID loop tuning. Numerous sources are available for specialized methods of tuning that are appropriate for a specific application.

8.2 PID Algorithm

As most users of PID controllers realize, the terminology for the actual algorithm terms and even the algorithms themselves can vary between different manufacturers. This is important to recognize as early as possible, since just plugging in similar values from one controller into another can result in dramatically different results. There are various basic forms of PID algorithms that are commonly seen, and the implementation here is the most common version; The ISA algorithm (commonly referred to as the “ideal” algorithm.)

$$output = P\left[e(t) + \frac{1}{I}\int e(t)d(t) + D\frac{de(t)}{dt}\right]$$

Where:

output =	controller output
P =	proportional gain
I =	integral gain
D =	derivative gain
t =	time
e(t) =	controller error (e=measured variable – setpoint)

Figure 15 - ISA PID Equation

The most notable feature of the algorithm is the fact the proportional gain term affects all components directly (unlike some other algorithms - like the "series" form.) If a pre-existing controller utilizes the same form of the algorithm shown above, it is likely similar settings can for made if the units on the settings are exactly the same. Be careful of this, as many times the units are the reciprocals of each other (i.e. reps-per-min, sec-per-rep.)

PID stands for "proportional, integral, derivative." These terms describe the three elements of the complete controller action, and each contributes a specific reaction in the control process. The PID controller is designed to be primarily used in a "closed-loop" control scheme, where the output of the controller directly affects the input through some control device, such as a pump, valve, etc.

Although the three components of the PID are described in the setting area (section 6.25), here are more general descriptions of what each of the PID elements contribute to the overall action of the controller.

P Proportional gain. With no "I" or "D" contribution, the controller output is simply a factor of the proportional gain multiplied by the input error (difference between the measured input and the controller setpoint.) Because a typical chemical control loop cannot react instantaneously to a correction signal, proportional gain is typically not efficient by itself – it must be combined with some integral action to be useful. Set the P term to a number between 2-4 to start. Higher numbers will cause the controller action to be quicker.

I Integral gain. Integral gain is what allows the controller to eventually drive the input error to zero – providing accuracy to the control loop. It must be used to affect the accuracy in the servo action of the controller. Like proportional gain, increasing integral gain results in the control action happening quicker. Set the I term to a number between 3-5 to start (1-2 more than P). Like proportional gain, increasing the integral term will cause the controller action to be quicker.

D Derivative gain. The addition of derivative control can be problematic in many applications, because it greatly contributes to oscillatory behavior. In inherently slow chemical control process', differential control is generally added in very small amounts to suppress erratic actions in the process that are non-continuous, such as pumps and valves clicking on and off. However, as a starting point for chemical process control, its best to leave the "D" term set to 0.

Based on these descriptions, the focus on tuning for chemical applications really only involves adjustment of "P" and "I" in most cases. However, increasing both increases the response of the controller. The difference is in the time of recovery. Although combinations of high "P's" and low "I" will appear to operate the same as combinations of low "P's" and high "I's", there will be a difference in rate of recovery and stability. Because of the way the algorithm is structured, large "P's" can have a larger impact to instability, because the proportional gain term impacts all the other terms directly. Therefore, keep proportional gain lower to start and increase integral gain to achieve the effect required.

Many of the classical tuning techniques have the user start with all values at 0, and then increase the P term until oscillations occur. The P value is then reduced to ½ of the oscillatory value, and the I term is increased to give the desired response. This can be done with the Q46P controller, with the exception that the I term should start no lower than 1.0.

If it appears that even large amounts of integral gain (>20) don't appreciably increase the desired response, drop I back to about 1.0, and increase P by 1.00, and start increasing I again. In most chemical control schemes, I will be approximately 3 times the value of P.

8.3 Classical PID Tuning

Unlike many high speed position applications where PID loops are commonly used, the chemical feed application employed by this instrument does not require intense mathematical exercise to determine tuning parameters for the PID. In fact, the risk of instability is far greater with overly tuned PID control schemes. In addition, many of the classical mathematical exercises can be damaging or wasteful in the use of chemicals when the process is bumped with large amounts of input error to seek a response curve. Because of this, the general adjustment guidelines described in section 8.2 are sufficient for almost all application tuning for this instrument. Beyond this, many sources are available for classical tuning methods.

8.4 Manual PID Override Control

The Q46 electronics is equipped designed to allow the user to take manual control of the PID output. This is often useful when starting up a control loop, or in the event that you wish to bump the system manually to measure system response time.

To access the manual PID control, you must be in the MEASURE mode of operation and you must have the PID output displayed on the lower line. This line will indicate "XX.X% XX.X mA" with the X values simply indicating the current values. With this display on the screen, press and hold the ENTER key for about 5 seconds. You will see a small "m" show up between the % value and the mA value. This indicates you are now in manual mode.

Once in manual, you may increase the PID output by pressing the UP arrow or you may decrease the output by pressing the LEFT arrow. This will allow you to drive the PID output to any desired setting.

To revert to normal PID control, press and hold the ENTER key again until the "m" indicator disappears.

8.5 Common PID Pitfalls

The most common problem occurring in PID control applications involves the false belief that proper settings on only the PID controller can balance any process to an efficient level.

Close-loop control can only be effective if all elements in the loop are properly selected for the application, and the process behavior is properly understood. Luckily, the nature of simple chemical control process' are generally slow in nature. Therefore, even a de-tuned controller (one that responds somewhat slowly) can still provide substantial improvements to setpoint control. In fact, damaging oscillatory behavior is far more likely in tightly tuned controllers where the user attempted to increase response too much.

When deciding on a PID control scheme, it is important to initially review all elements of the process. Sticking valves, undersized pumps, or delays in reaction times associated with chemical addition can have a dramatic effect on the stability of the control loop. When controlling a chemical mix or reaction, the sensor should be placed in a location that ensures proper mixing or reaction time has occurred.

The easiest process' to control with closed-loop schemes are generally linear, and symmetrical, in nature. For example, controlling level in tank where the opening of valve for a fixed period of time corresponds linearly to the amount that flows into a tank. Chemical control process' can be more problematic when the nature of the setpoint value is non-linear relative to the input of chemical added. For example, pH control of a process may appear linear only in a certain range of operation, and become highly exponential at the extreme ranges of the measuring scale. In addition, if a chemical process is not symmetrical, that means it responds differentially to the addition and subtraction of chemical. It is important in these applications to study steady-state impact as well as step-change impact to process changes. In other words, once the process has apparently been tuned under normal operating conditions, the user should attempt to force a dramatic change to the input to study how the output reacts. If this is difficult to do with the actual process input (the recommended method), the user can place the control in manual at an extreme control point such as 5% or 95%, and release it in manual. The recovery should not be overly oscillatory. If so, the loop needs to be de-tuned to deal with that condition (reduce P and/or I.)

Part 9 - System Maintenance

9.1 General

The Q46P pH System will generally provide unattended operation over long periods of time. With proper care, the system should continue to provide measurements indefinitely. For reliable operation, maintenance on the system must be done on a regular schedule. Keep in mind that preventive maintenance on a regular schedule is much less troublesome than emergency maintenance that always seems to come at the wrong time.

9.2 Analyzer Maintenance

No unusual maintenance of the analyzer is required if installed according to the guidelines of this operating manual. If the enclosure door is frequently opened and closed, it would be wise to periodically inspect the enclosure sealing gasket for breaks or tears.

9.3 Cleaning the Sensor

The Q-Blast sensor cleaning system provides a regular surface cleaning of the glass electrode and junction area. The greatly reduces the need for manual sensor cleaning. However, every 6 months or so, it is a good idea to do a more thorough manual cleaning.

Carefully wipe the measuring end of the sensor with a clean soft cloth. Then rinse with clean, warm water - use distilled or de-ionized water if possible. This should remove most contaminate buildup.

Prepare a mild solution of soap and warm water. Use a non-abrasive detergent (such as dishwashing liquid).

NOTE: DO NOT use a soap containing any oils (such as lanolin). Oils can coat the glass electrode and harm sensor performance.

Soak the sensor for several minutes in the soap solution.

Use a small, extra-soft bristle brush (such as a mushroom brush) to thoroughly clean the electrode and saltbridge surfaces. If surface deposits are not completely removed after performing this step, use a dilute acid to dissolve the deposits. After soaking, rinse the sensor thoroughly with clean, warm water. Placing the sensor in pH 7 buffer for about 10 minutes will help to neutralize any remaining acid.

NOTE: DO NOT soak the sensor in dilute acid solution for more than 5 minutes. This will help to prevent the acid from being absorbed into the saltbridge.

WARNING: ACIDS ARE HAZARDOUS. Always wear eye and skin protection when handling. Follow all Material Safety Data Sheet recommendations. A hazardous chemical reaction can be created when certain acids come in contact with process chemicals. Make this determination before cleaning with any acid, regardless of concentration.

9.4 Replacing Sensor Saltbridge

1. Hold the sensor with the process electrode pointing up. Place a cloth or towel around the saltbridge. Turn the saltbridge counterclockwise (by hand) to loosen and remove the saltbridge. Do NOT use pliers.

2. Pour out the old reference buffer by inverting the sensor (process electrode pointing down). If the reference buffer does not run out, gently shake or tap the sensor.

3. Rinse the reference chamber of the sensor with de-ionized water. Fill the reference chamber of the sensor with fresh Reference Cell Buffer (09-0033) for (07-0127 & 0128) Sensors and (09-0052) for (07-0107) Combination Sensor. The chamber holds 6 to 7 mL of solution. MAKE SURE that 6 to7 mL is used when refilling. The chamber should be FULL.

4. Inspect the new saltbridge to verify that there are 2 o-rings inside the threaded section of the saltbridge

5. Place the new saltbridge over the ground assembly of the sensor. Place a cloth or towel around the saltbridge and hand-tighten the saltbridge by turning it clockwise.

NOTE: Every ATI Q25P Sensor includes a spare bottle of Reference Buffer Solution, 7.0 pH. This is NOT typical pH 7 buffer, it is a special "high-capacity" buffer developed to ensure the highest possible stability of the reference portion of the pH measurement. No substitutions should be made.

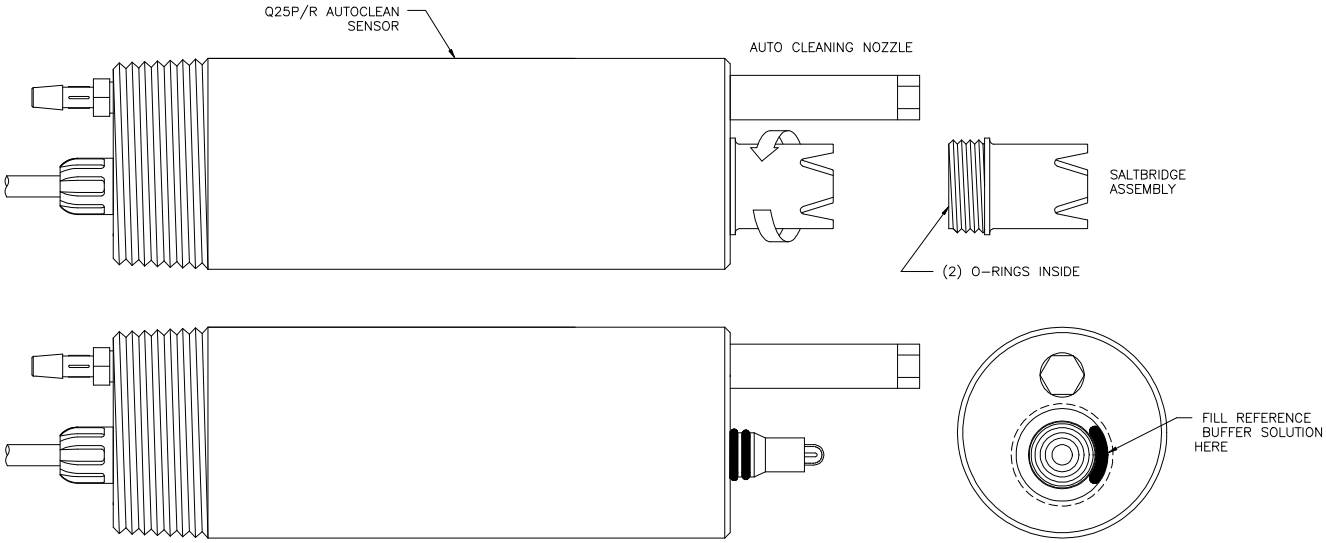

Figure 16 - Saltbridge / Reference Buffer Instructions

Part 10 - Troubleshooting

10.1 General

The information included in this section is intended to be used in an attempt to quickly resolve an operational problem with the system. During any troubleshooting process, it will save the most time if the operator can first determine if the problem is related to the analyzer, sensor, or some external source. Therefore, this section is organized from the approach of excluding any likely external sources, isolating the analyzer, and finally isolating the sensor. If these procedures still do not resolve the operational problems, any results the operator may have noted here will be very helpful when discussing the problem with the factory technical support group.

10.2 External Problem Sources

To begin this process, review the connections of the system to all external connections.

1. Verify the analyzer is earth grounded. For all configurations of the analyzer, an earth ground connection MUST be present for the shielding systems in the electronics to be active. Grounded conduit provides no earth connection to the plastic enclosure, so an earth ground wiring connection must be made at the power input terminal strip. Use the special “shield terminal” stub on the power supply board for optimum sensor cable shield grounding.

2. Verify the proper power input is present (90-260 VAC or 12-24 VDC.)

3. Verify the loads on any 4-20 mA outputs do not exceed the limits in the Instrument Specifications (500 Ohms each for analyzer.) During troubleshooting, it is many times helpful to disconnect all these outputs and place wire-shorts across the terminals in the instrument to isolate the system and evaluate any problems which may be coming down the analog output connections.

4. Do not run sensor cables or analog output wiring in the same conduits as power wiring. If low voltage signal cables must come near power wiring, cross them at 90° to minimize coupling.

5. If rigid conduit has been run directly to the Q46 enclosure, check for signs that moisture has followed conduit into the enclosure.

6. Check for ground loops. Although the sensor is electrically isolated from the process water, high frequency sources of electrical noise may still cause erratic behavior in extreme conditions. If readings are very erratic after wiring has been checked, check for a possible AC ground loop by temporarily placing the sensor into a bucket of water. The reading should be immediately stabilize.

7. On relay based systems, check the load that is connected to the relay contacts. Verify the load is within the contact rating of the relays. Relay contacts which have been used for higher power AC current loads may become unsuitable for very low signal DC loads later on because a small amount of pitting can form on the contacts. If the load is highly inductive (solenoids, motor starters, large aux relays), note that the contact rating will be de-rated to a lower level. Also, due to the large amount of energy present in circuits driving these types of loads when they are switched on an off, the relay wiring placement can result in electrical interference for other devices. This can be quickly resolved by moving wiring, or by adding very inexpensive snubbers (such As Quencharcs) to the load.

8. Carefully examine any junction box connections for loose wiring or bad wire stripping. If possible, connect the sensor directly to the analyzer for testing.

9. Check sensor for fouling. Look closely for signs of grease or oil which may be present.

10.3 Instrument Checks

1. Remove sensor completely and connect 1100 Ohms from the yellow to black sensor input leads. Make sure the unit is configured for a Pt1000 thermal element and that the temperature is not in manual locked mode. Also, connect a wire jumper from the red cable lead input to the green cable lead input. The temperature reading should be approximately 25°C, the pH reading should be approximately 7.00 pH, and the sensor mV reading should be between -20 and +20 mV.

2. With a DMM, measure the DC voltage from the white sensor lead connection to the black sensor lead connection. With the positive DMM lead on the white wire, the meter should read between -4.5 and -5.5 VDC.

3. For the line powered version, verify the proper line voltage power. With power disconnected, verify continuity across the line fuse.

4. For the DC transmitter variation, verify that power supply has required voltage based on size of resistance in current loop. Large resistive loads can reduce available power for transmitter.

   (NOTE: See sensor manual for specific sensor tests to be performed.)

10.4 Display Messages

The Q46 Series instruments provide a number of diagnostic messages which indicate problems during normal operation and calibration. These messages appear as prompts on the secondary line of the display or as items on the Fault List.

MESSAGE	DESCRIPTION	POSSIBLE CORRECTION
Max is 200	Entry failed, maximum user value allowed is 200.	Reduce value to ≤ 200
Min is 200	Entry failed, minimum value allowed is 200.	Increase value to ≥ 200
Cal Unstable	Calibration problem, data too unstable to calibrate. Icons will not stop flashing if data is too unstable. User can bypass by pressing ENTER.	Clean sensor, get fresh cal solutions, allow temperature and conductivity readings to fully stabilize, do not handle sensor or cable during calibration.
Out of Range	Input value is outside selected range of the specific list item being configured.	Check manual for limits of the function to be configured.
Locked!	Transmitter security setting is locked.	Enter security code to allow modifications to settings.
Slope HIGH	Sensor slope from calibration is greater than 110%	Get fresh cal solutions, allow temperature and pH readings to fully stabilize, do not handle sensor or cable during calibration
Slope LOW	Sensor slope from calibration is less than 80%	Clean sensor, get fresh cal solutions, allow temperature and pH readings to fully stabilize, check for correct buffer values.
Unlocked!	Transmitter security has just been unlocked.	Displayed just after security code has been entered.
TC-F25 Lock!	The TC selection is in F25 mode, locked at 25°C	Calibration and TC adjustment cannot be performed while the TC is in F25 mode. To allow access to TC calibrations, change TC mode from F25 (fixed 25) to SENS (sensor).
Offset High	The sensor zero offset point is out of the acceptable range of -90 to +90 mV.	Clean or replace saltbridge, replace reference cell solution, clean sensor, get fresh calculations, allow temperature and pH readings to fully stabilize, check for correct buffer values.
Sensor High	The raw signal from the sensor is too high	Check wiring connections to sensor.
Sensor Low	The raw signal from the sensor is too low.	Check wiring connections to sensor.
pH too High	The pH reading is > 14.00 pH.	The pH reading is over operating limits
pH too Low	The pH reading is < 0.00 pH	The pH reading is under operating limits
Temp High	The temperature reading is > 110ºC.	The temperature reading is over operating limits. Check wiring and expected temp level. Perform RTD test as described in sensor manual. Recalibrate sensor temperature element if necessary.

MESSAGE	DESCRIPTION		POSSIBLE CORRECTION
TC Error	TC may be open or shorted.		Check sensor wiring and perform RTD test as described in sensor manual. Check j-box connections.
Temp Low	The temperature reading is < -10 ºC		The temperature reading is over operating limits. Check wiring and expected temp level. Perform RTD test as described in sensor manual. Recalibrate sensor temperature element if necessary.
Meas Break	Leakage detected on measuring electrode of sensor		Measuring electrode glass may be cracked or broken. Electrical noise may falsely trip this diagnostic. Turn off glass diagnostic feature and see if sensor operates correctly. If it does not, sensor must be replaced.
Ref Break	Leakage detected on reference electrode of sensor.		Reference glass electrode may be cracked or broken. Electrical noise may falsely trip this diagnostic feature and see if sensor operates correctly. If it does not, sensor must be replaced.
TC Cal Fail	Failure of temperature calibration.		Clean sensor, check cal solution temperature and repeat sensor temp calibration. TC calibration function only allows adjustments of +/- 6 ºC. If still failure, perform sensor tests as described in section 10.5. Replace sensor if still failure.
pH Cal Fail	Failure of pH calibration		Clean sensor, get fresh cal solutions, regenerate sensor (if necessary) and redo calibration. If still failure, sensor slope may be less than 80% or offset may be out of range. Perform sensor tests as described in sensor manual. Replace sensor if still failure.
EPROM Fail	Internal nonvolatile memory failure		System failure, consult factory.
Chcksum Fail	Internal software storage error.		System failure, consult factory.
Display Fail	Internal display driver fail.		System failure, consult factory.
mV Cal Fail	Failure of factory temperature calibration.		Consult factory.

Figure 17 - Q46P Display Messages

10.5 Sensor Tests

The first step in resolving any measurement problem is to determine whether the trouble lies in the sensor or the transmitter. Since measurement problems can often be traced to dirty sensor electrode glass and/or saltbridge, cleaning the sensor using the method outlined in Section 8.4 should always be the first step in any troubleshooting.

If the sensor cannot be calibrated after cleaning, replace the saltbridge and reference cell buffer 7 pH as outlined in Section 8.5.

If the sensor still cannot be calibrated, perform the following test. A multimeter, 7 pH buffer and another buffer at least 2 pH units away will be needed.

1. With transmitter power on and sensor connected, place the multimeter's positive (+) lead on the white position of the transmitter terminal strip and the negative (-) lead on the black position. The multimeter should read between –4.2 and –6.5 VDC.

2. Disconnect the sensor's red, green, yellow, and white wires from the transmitter or junction box. Re-check Step 1.

3. Place the sensor in pH 7 buffer. As in calibration, allow the temperatures of the sensor and buffer to equilibrate at room temperature (approximately 25 ºC).

4. Verify that the sensor's temperature element (Pt1000 RTD) is functioning properly by measuring the resistance between the sensor's yellow and black wires. The nominal resistance value at 25ºC is 1097 ohms. Use the following table as a guide to the approximate resistance value:

ºC	RTD Ω
20	1078
25	1097
30	1117
35	1136

5. Reconnect the yellow and white wires.

6. Connect the multimeter's positive (+) lead to the red wire and its negative (-) lead to the green wire. With the sensor in the pH 7 buffer at approximately 20-30ºC, measure the DC millivolts. The sensor offset reading should be between –50 and +50 mV. If it is not, replace sensor reference solution and saltbridge (See Section 8.5) and re-test.

7. With the multimeter connected as in Step 5, rinse the sensor with clean water and place it in the second buffer. Allow the temperatures to equilibrate as before. Now measure the sensor span reading. Use the following table to determine approximate mV:

pH	mV
2.00	+296
4.00	+178
7.00	0
9.18	-129
10.00	-178

NOTE: The mV values listed above are for ideal conditions (sensor offset = 0 mV) and therefore represent midpoints in a range. The table shows the difference in mV which should be seen when going from one pH value to another. For example, at 7.00 pH, the mV reading will be from –50 to +50 mV (at room temperature) if the sensor is working properly. If the reading is exactly +20 mV, then going to 4.00 pH buffer should produce a reading of +198 mV, or a difference of +178 mV.

Spare Parts

PART NO.	DESCRIPTION
03-0397	Q46P Front Lid Assembly
07-0338	AC Powered Analyzer Electronics Assembly, 90-260 VAC
07-0339	DC Powered Analyzer Electronics Assembly, 12-24 VDC
07-0340	AC Powered Analyzer Electronics Assembly, w/Profibus
07-0341	DC Powered Analyzer Electronics Assembly, w/Profibus
01-0353	Q-Blast Power PCB
31-0019	3 Cond. 22 Awg Cable
07-0107	Auto-Clean (Combination) pH Sensor, 30’ cable
07-0127	Auto-Clean pH sensor, 30' cable
07-0128	Auto-Clean pH sensor, 60' cable
05-0060	Saltbridge Only
09-0033	Reference Solution (Q25 & Q22 Sensors)
09-0052	Reference Solution (Combination) for (07-0107) Sensor
05-0057	pH/ORP Sensor Regeneration Kit
36-0040	Compression Pump, 12VDC
36-0041	Pump Mounting Kit
36-0039	Solenoid Valve, 12VDC
44-0040	PVC Tubing
23-0018	Fuse, 100 mA (90-260VAC only)
23-0022	Fuse, 250 mA (12-24 VDC only)
38-0073	Terminal block plug, 4 position (outputs)
38-0072	Terminal block plug, 3 position (relays)
38-0075	Terminal block plug, 3 position (power)
38-0074	Terminal block plug, 3 position (shields)
31-0173	20 Pos. Ribbon cable assembly
44-0276	Polyurethane Tubing, Black (sold /ft.)
00-0930	Monitor Handrail Mounting Kit
00-0624	Sensor mounting assembly
09-0034	pH4 Buffer, 1,000 mL
09-0035	pH7 Buffer, 1,000 mL
09-0036	pH10 Buffer, 1,000 mL

Lock/Unlock Code: 1464