EXTECH INSTRUMENTS

USER GUIDE

AC/DC Magnetic Meter

Model MF100

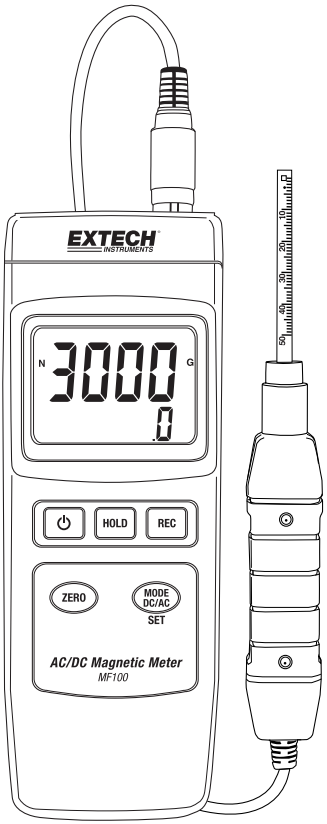

Introduction

Thank you for selecting the Extech Instruments Model MF100. This device is shipped fully tested and calibrated and, with proper use, will provide years of reliable service. Please visit our website (www.extech.com) to check for the latest version of this User Guide, Product Updates, and Customer Support.

Features

- DC and AC magnetic field measurements
- North and South pole indication
- Automatic temperature compensation
- Zero button for DC, AC magnetic function
- Separate probe for remote measurements
- High accuracy
- Advanced functionality with programmable user Settings
- Ideal for a variety of laboratory and field uses
- Heavy duty, compact housing with hard-shell carrying case
- Auto power off feature conserves battery energy
- Easy-to-read LCD display with green backlight
- Data Hold and MIN-MAX Record-Recall features

Safety

International Safety Symbols

This symbol indicates the user must refer to the manual for further information.

Double insulation

Safety Notes

- Remove the battery if the device is to be stored for longer than 60 days.
- Never dispose of batteries in a fire. Batteries may explode or leak.

Cautions

- Read and understand this user manual before operating the meter.
- If the equipment is used in a manner not specified by the manufacturer, the protection provided by the equipment may be impaired.

Description

Meter Description

1. Probe Connection
2. LCD Display
3. HOLD Button
4. POWER Button
5. REC Button
6. ZERO Button
7. MODE DC/AC/SET Button
8. Tilt-Stand and battery compartment on rear
9. Reset Button
10. DC 9V Power Adapter jack

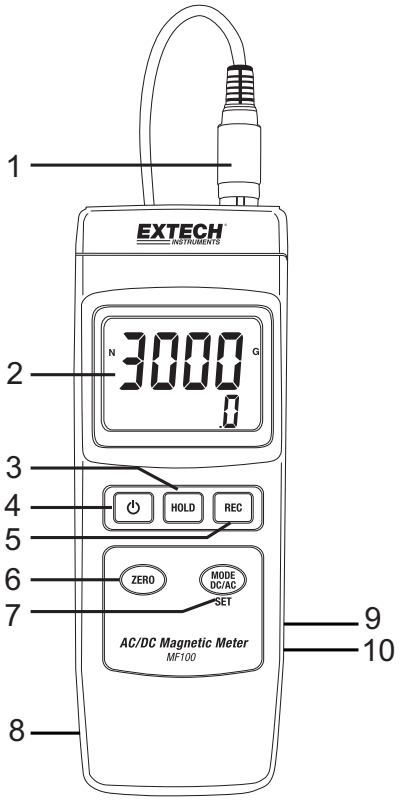

Fig. 1 – Meter Description

Probe Description

1. Probe Sensing Head
2. Probe Handle
3. Probe cable
4. Probe Head Cover

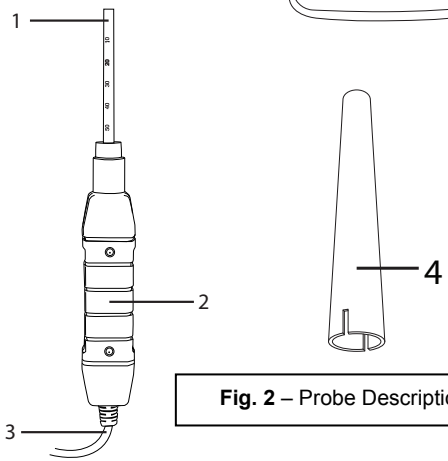

Fig. 2 – Probe Description

Display Description

1. North **N** or South **S** indication
2. Unit of measure
   (**G** for Gause or **mT** for milliTesla)
3. AC or DC field and resolution information
4. Magnetic reading

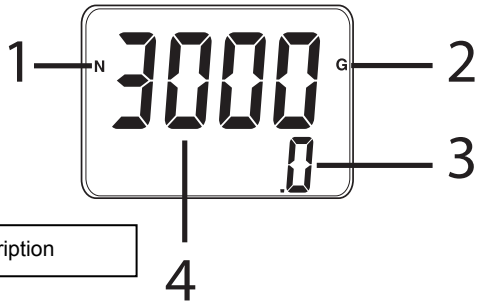

Fig. 3 – Display Description

Button Description

1. POWER Button: Press and hold to power the meter ON or OFF
2. HOLD Button: Short press to freeze displayed reading (HOLD icon will appear); another short press to return to normal operation
3. REC Button: Short press to start recording MAX and MIN readings. Additional short presses will scroll through the saved MAX and MIN readings. Press and hold to exit this mode
4. MODE DC/AC/SET Button: Short presses to scroll through the available units of measure and North/South modes. Long press to access the User Settings menu
5. ZERO Button: Short press to zero the display before taking a reading

Reset Button (right side of meter; not pictured below): Press to restore the meter to factory default conditions. If the meter becomes unresponsive use the reset button to restore the meter.

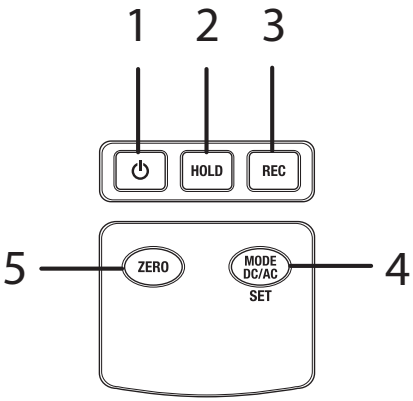

Fig. 4 – Button Description

Operation

AC/DC Magnetic Field Measurement

Press and hold the POWER button for at least 2 seconds to switch the meter ON. Use the **MODE** button to scroll through the following screens in sequence:

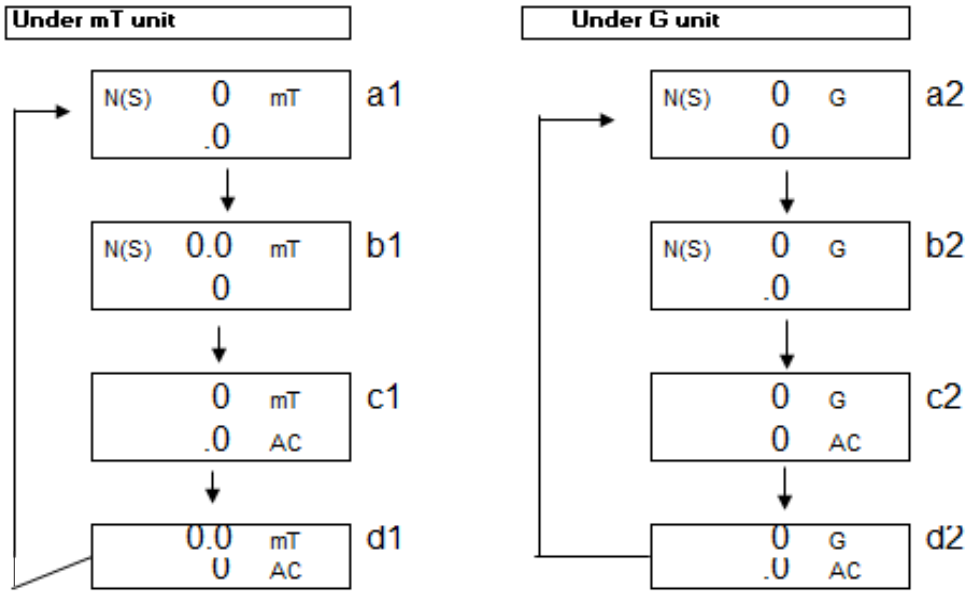

Fig. 5 – Programming screens

Each screen represents the resolution for the respective unit of measure:

a1 screen for 0.1 mT DC resolution measurements

b1 screen for 0.01 mT DC resolution measurements

c1 screen for 0.1 mT AC resolution measurements

d1 screen for 0.01 mT AC resolution measurements

a2 screen for 1 G DC resolution measurements

b2 screen for 0.1 G DC resolution measurements

c2 screen for 1 G AC resolution measurements

d2 screen for 0.1 G AC resolution measurements

For DC magnetic field measurements, the display will show either the **N** or **S** indicator. For the North Pole, the **N** indicator will be shown. Similarly, for the South Pole, the **S** indicator will be shown. For AC magnetic field measurements, the display will show the **AC** indicator (the **N** or **S** indicators will not then be shown).

Press the probe head to the testing material (see Fig 6). The display will show the magnetic field value along with the unit of measure (mT = MilliTesla or G=Gauss) and AC, if an AC field.

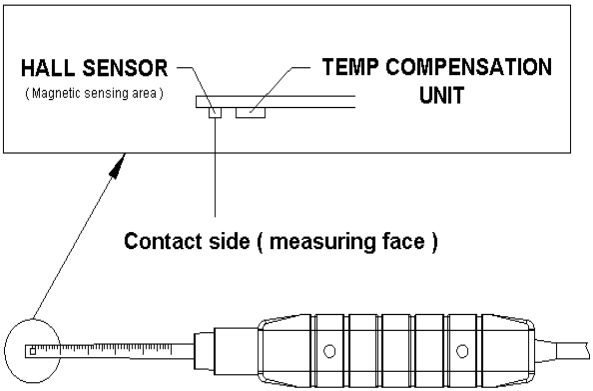

Fig. 6 – Touching Probe to Test Material

Note: When the meter is powered ON, the display may show a non-zero value (because of environmental interference). Before taking a measurement press the **ZERO button** to null the display.

Data Hold

During measurements, press the **HOLD** button and the measured value will be held (the LCD will display **HOLD)**. Press the **HOLD** button again to exit the data hold function.

Data Recording (Maximum and Minimum Reading)

Press the **REC** button to start the data recording function. The LCD will display **REC**. Press the **REC** button again and **REC MAX** along with the maximum reading recorded will appear on the LCD. Press the **REC** button again to display the minimum value (the LCD will display **REC MIN)**. To exit the data recording function, press and hold the **REC** button for two seconds. The meter will return to the normal mode of operation.

Note: When making DC magnetic field measurements while the **RECORD** function is active, the user cannot change from North to South pole or vice versa.

User Settings

Press and hold the **SET** button for two seconds to enter the advanced settings mode. Press the **SET** button to cycle through the three main functions:

POFF	Auto power OFF management
CLr	Factory-only diagnostic function
UNIt	Select the magnetic field units (mT or G)

Note: After 7 to 10 seconds the meter will return to the normal operating mode.

(POFF) Auto Power OFF

The MF100 uses an Auto Power OFF utility to switch the meter off automatically in order to conserve battery energy. This feature can be enabled or disabled:

- In the Advanced Settings mode, when the LCD displays **POFF**, press the **REC** button
- Use the Zero and Mode buttons to select **YES** or **NO**
- Selecting **YES** enables the Auto Power OFF feature
- Selecting **NO** disables the Auto Power OFF feature (user will then have to switch off manually)
- Press the **REC** button to save the setting

(UNiT) Selecting Units of Magnetic Field

In the User Settings mode when the LCD displays **UNIT**, press the **REC** button

- Use the ZERO or MODE button to select **mT** or **G**
- Select **mT** for milliTesla units
- Select **G** for Gauss units
- Press **REC** to save the selection

Factory-only CLR function

When in the User Settings mode, with **CLr** displayed, press **REC** to skip this step.

This is a factory-only utility

AC Power Adaptor

This meter is normally powered by one 9V battery; however an optional 9V power adaptor is available. When the adaptor is used, the meter is permanently powered and the power button is disabled.

Factory Default Reset

If the meter becomes inoperative, it can be reset to factory defaults.

Open the side compartment and, with the meter on, press the reset switch.

The meter will be reset and the User Settings will be cleared and reset to factory defaults.

Battery Replacement

When the low battery icon appears on the LCD, the battery must be replaced. Several hours of accurate readings are still possible in this condition; however batteries should be replaced as soon as possible:

- Remove the Phillips screw from the battery compartment on the rear of the meter.
- Remove and safely place the battery compartment and screw where they will not be damaged or lost.
- Replace the 9V battery observing correct polarity.
- Replace the battery compartment cover with the Phillips screw.

Note: The meter can also obtain power from the DC 9V Power Adapter. The meter will be permanently powered ON when the adapter is used (the power button is disabled).

All EU users are legally bound by the battery ordinance to return all used batteries to collection points in the community or wherever batteries / accumulators are sold! Disposal in the household garbage is prohibited!

Specifications

Circuit	Custom one-chip microprocessor LSI circuit		
Display (LCD) Size	52 x 38mm (2.0 x 1.5 in.)		
Measurement Units	mT		MilliTesla
	G		Gauss
Measurement Range, DC	mT	Range 1	300.00 mT x 0.01 mT
		Range 2	3,000.0 mT x 0.1 mT
	G	Range 1	3,000.0 G x 0.1 G
		Range 2	30,000 G x 1 G
Measurement Range, AC	mT	Range 1	150.00 mT x 0.01 mT
		Range 2	1,500.0 mT x 0.1 mT
	G	Range 1	1,500.0 G x 0.1 G
		Range 2	15,000 G x 1 G
Accuracy	DC		± (5% rdg. + 10 dgt.)
	AC		± (5% rdg. + 20 dgt.)
Frequency Response	AC Measurement: 50 Hz / 60 Hz		
Sensor	Hall Effect Sensor with Auto Temperature Compensation		
Field Direction	Uni-axial		
Display Sampling Time	Approx. 1 second		
Operating Temperature	0 to 50°C (32 to 122 °F)		
Operating Humidity	Less than 85% R.H.		
Power Supply	9V Battery		
	Universal AC adaptors included		
Power Consumption	Approximately 20.5mA DC		
Weight (meter and probe)	270g (9.5 oz.)		
Dimensions	Main Instrument: 195 x 68 x 30 mm (7.68 x 2.67 x 1.18 in.)		
	Probe: 198 x 25 x 19 mm (7.80 x 0.98 x 0.75 in.)		

Copyright © 2015 FLIR Systems, Inc.

All rights reserved including the right of reproduction in whole or in part in any form

ISO-9001 Certified

www.extech.com