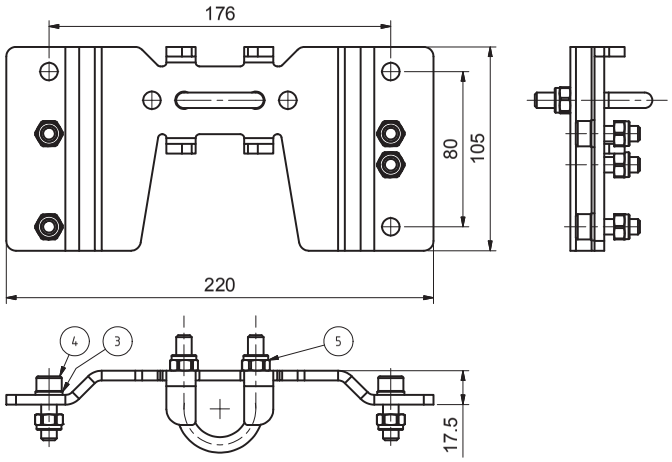


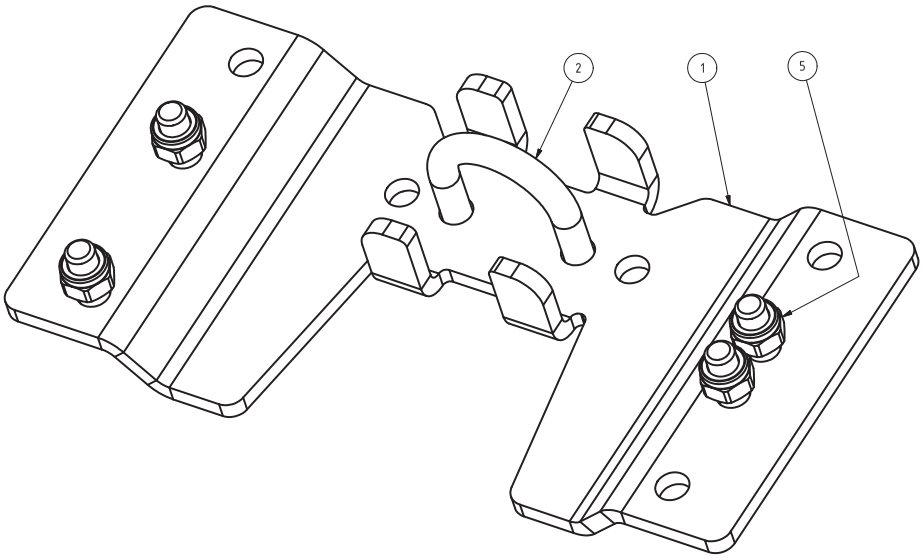


Weight: 0,934 kg

| Ite | Qty | Description | Drawing/Std./Type/Etc. | AADI nr. |
|---|---|---|---|---|
| 5 | 6 | Hex lock nut | DIN 985 - M8 A4 | 1652033 |
| 4 | 4 | Socket head cap screw | Din 912 - M8x25 A4 | 1642123 |
| 3 | 4 | Washer | Din 125 - 8,4 A4 | 1652027 |
| 2 | 1 | 3/4-8mm U bolt 316 | 1690014 | 1690014 |
| 1 | 1 | Bracket for DCPS | DID-51150 | 3966757 |

| Date | Constr./Drw. | Approved | Scale |
|---|---|---|---|
| 20.10.2015 | HT | | 1:2 |

AANDERAA
www.aanderaa.com
a xylem brand

Bracket for DCPS / DCS

Part No. 0975746

Drawing No. DID-51174

Rev. No. --

Original Size A3

Sheet 1 of 1

Edition